제 2011 - 98034 호

안 전 인 증 서

(사업장명) 극동호이스트(주)

(소 재 지) 경기도 안산시 성곡동630-2 반월공단 B-607-14

위 사업장에서 제조하는 아래의 품목이 산업안전보건법 제34조 및 같은 법 시행규칙 제58조의4제4항에 따른 안전인증 심사 결과 안전·보건기준에 적합하므로 안전인증표시의 사용을 인증합니다.

품 목

호이스트

형식,모델(용량,등급)/인증번호

KD2-D (2.0Ton) /11-AQ2AC-03671

인 증 기 준

고용노동부 고시 제2011 - 39호 (위험기계,기구 의무안전인증 고시)

인 증 조 건

2011년 11월 04일

한국산업안전보건공단이사장

심 사 결 과 통 지 서

신청인	사 업 장 명	극동호이스트(주)	사업장관리번호 (사업자등록번호)	134-81-013350 134-81-01335
	소 재 지	(425 - 833) 경기도 안산시 성곡동630-2 반월공단 B-607-14		
	대표자 성명	최성찬		
안전인증대상 기계 · 기구명		호이스트		
형 식 (규 격)		KD2-D	용 량 (등 급)	2.0 Ton
인 증 심 사 원		조성준 변명수 조성준		

산업안전보건법 제 34조 및 같은 법 시행규칙 제58조의4에 따라 실시한 서면심사 결과가 적합 함을 통지합니다.

2011 년 06 월 14 일

한국산업안전보건공단 경기서부지도원장

불법복제 및 배포금지

서 면 심 사 서 류

형식 번호 : KD2-D

극 동 호 이 스 트 (주)

工場 : 경기도 안산시 단원구 성곡동 630-2 반월공단607-14

電話 : 031) 491 - 5311

FAX : 031) 494 - 5315

192.168.11.155 / 2011-06-17 15:51:43

동 일 형 식 일 람 표

사업장명	극동호이스트㈜	개정일자 및 번호		인증번호	
형식 및 모델		동일 형식 인정범위 및 내역			비 고
형식	모델	권상속도(m/min)	횡행속도(m/min)	양정(m)	횡행방식
KD2-D	KD2-L12-D	고속:10M/MIN	고속:24M/MIN	12	모터구동식
	KD2-L18-D		저속:16M/MIN	18	
	KD2-L24-D			24	
	KD2-L30-D	저속:5M/MIN	듀얼고속:24/12M/MIN	30	
			듀얼저속:16/8M/MIN		

불법복제 및 배포금지

192.168.11.155 / 2011-06-17 15:51:43

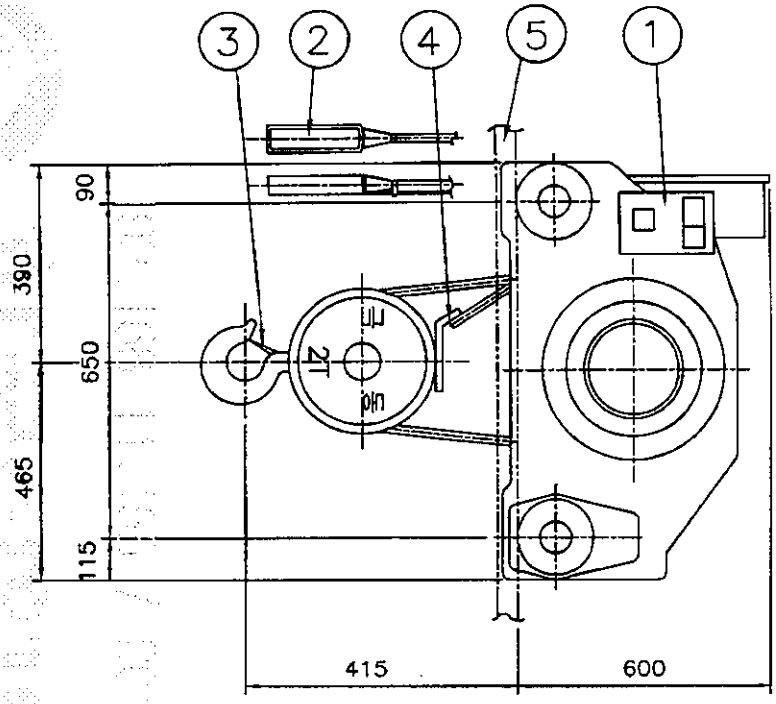

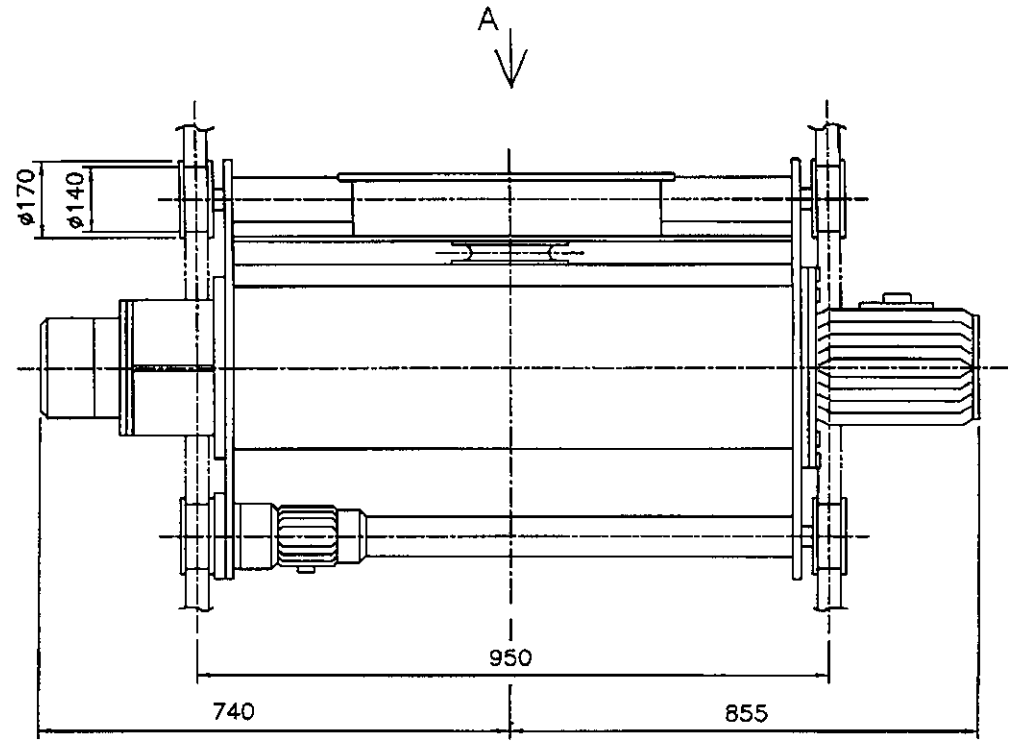

극동 호이스트
제한하중
2000 K

VIEW A

SPECIFICATION			
HOISTING LOAD			2 TON
TESTING LOAD			2.5 TON
LIFT			12 M
HOISTING	HIGH	SPEED	10 M/MIN
		MOTOR	3.7 KW x 4P
	LOW	SPEED	5 M/MIN
		MOTOR	1.8 KW x 8P
TRAVERS-ING	HIGH	SPEED	24 M/MIN
		MOTOR	0.75 KW x 4 P
	LOW	SPEED	16 M/MIN
		MOTOR	0.5 KW x 6 P
	DUAL HIGH	SPEED	24/12 M/MIN
		MOTOR	0.8/0.4 KW x 4/8 P
	DUAL LOW	SPEED	16/8 M/MIN
		MOTOR	0.5/0.25 KW x 6/12 P
WIRE ROPE			(6x19) ø8 x 4 FALLS
POWER SOURCE			AC3ø 220V(380,440,460,480)V 60Hz
TRAVERSING RAIL			15 KG/M
GROSS WEIGHT			450 KG

NO.	DESCRIPTION	MT'L	QTY SUB	QTY TOTAL	WEIGHT(Kg) SUB	WEIGHT(Kg) TOTAL	REMARKS.
5	T/S RAIL	–		–			15KG/M
4	UPPER LIMIT S/W	SS400		1			
3	SAFETY LATCH	SPC		1			
2	EMERGENCY S/W	–		1			
1	LOAD LIMITER	–		1			

PROJECT		DATE	DIM
			mm
TITLE	KD2 – L12 – D ARRANGEMENT DRAWING FOR HOIST	SCALE	PROJECTION
		A3/20	3rd

DRAWN	DESIGNED	CHECKED	APPROVED	REF. DRAWING

극동호이스트 주식회사
KUK DONG HOIST CO., LTD.

SHEET No.

DWG No. KD2D – 120

192.168.11.155 / 2011-06-17 15:51:43

불법복제 및 배포금지

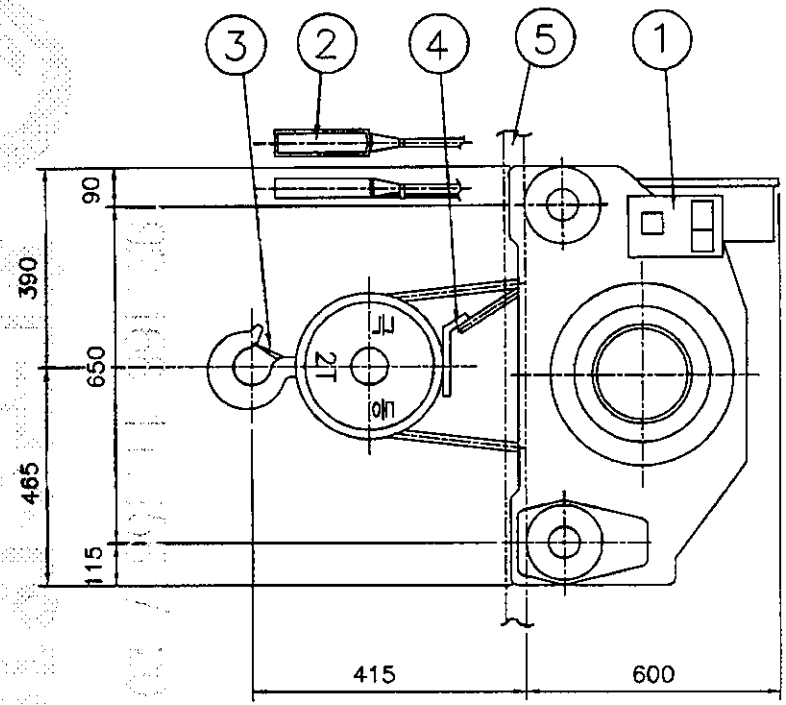

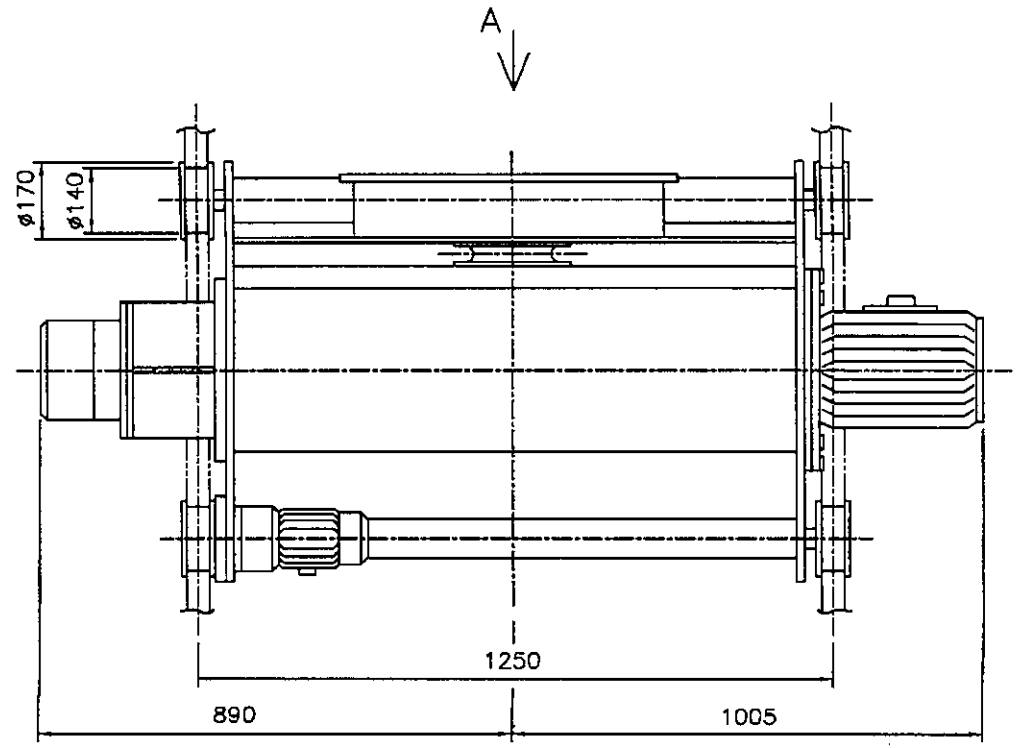

SPECIFICATION			
HOISTING LOAD			2 TON
TESTING LOAD			2.5 TON
LIFT			18 M
HOISTING	HIGH	SPEED	10 M/MIN
		MOTOR	3.7 KW x 4P
	LOW	SPEED	5 M/MIN
		MOTOR	1.8 KW x 8P
TRAVERS-ING	HIGH	SPEED	24 M/MIN
		MOTOR	0.75 KW x 4 P
	LOW	SPEED	16 M/MIN
		MOTOR	0.5 KW x 6 P
	DUAL HIGH	SPEED	24/12 M/MIN
		MOTOR	0.8/0.4 KW x 4/8 P
	DUAL LOW	SPEED	16/8 M/MIN
		MOTOR	0.5/0.25 KW x 6/12 P
WIRE ROPE			(6x19) ø8 x 4 FALLS
POWER SOURCE			AC3ø 220V(380,440,460,480)V 60Hz
TRAVERSING RAIL			15 KG/M
GROSS WEIGHT			520 KG

극동 호이스트
제한하중
2000 K

VIEW A

NO.	DESCRIPTION	MT'L	QTY SUB	QTY TOTAL	WEIGHT(Kg) SUB	WEIGHT(Kg) TOTAL	REMARKS.
5	T/S RAIL	–		–			15KG/M
4	UPPER LIMIT S/W	SS400		1			
3	SAFETY LATCH	SS400		1			
2	EMERGENCY S/W	–		1			
1	LOAD LIMITER	–		1			

PROJECT		DATE 97.10.23.	DIM mm
TITLE	KD2-L18-D ARRANGEMENT DRAWING FOR HOIST	SCALE A3/20	PROJECTION 3rd
DRAWN	DESIGNED	CHECKED	APPROVED
REF. DRAWING			

극동호이스트 주식회사
KUK DONG HOIST CO., LTD.

SHEET No.

DWG No. KD2D – 180

192.168.11.155 / 2011-06-17 15:51:43

불법복제 및 배포금지

192.168.11.155 / 2011-06-17 15:51:43

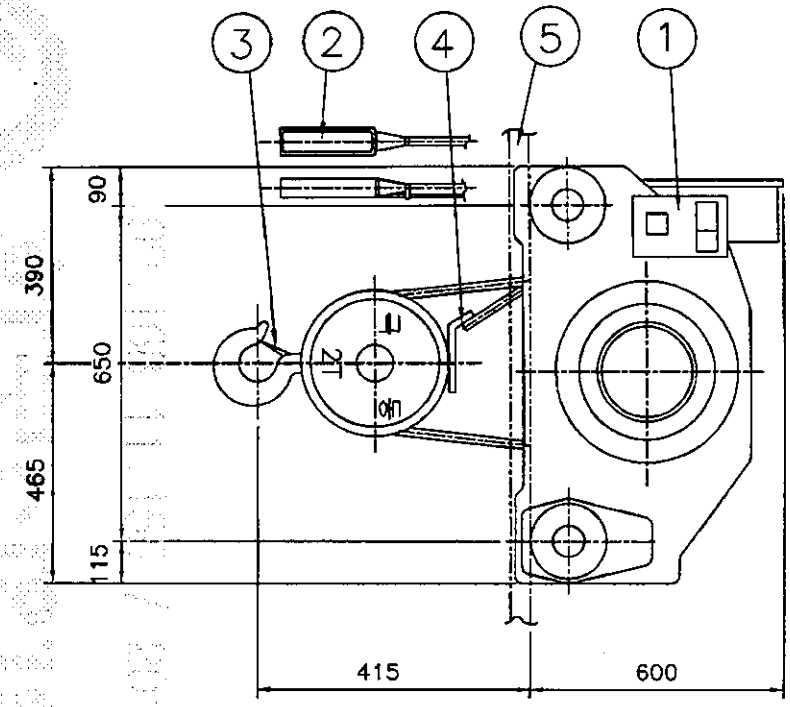

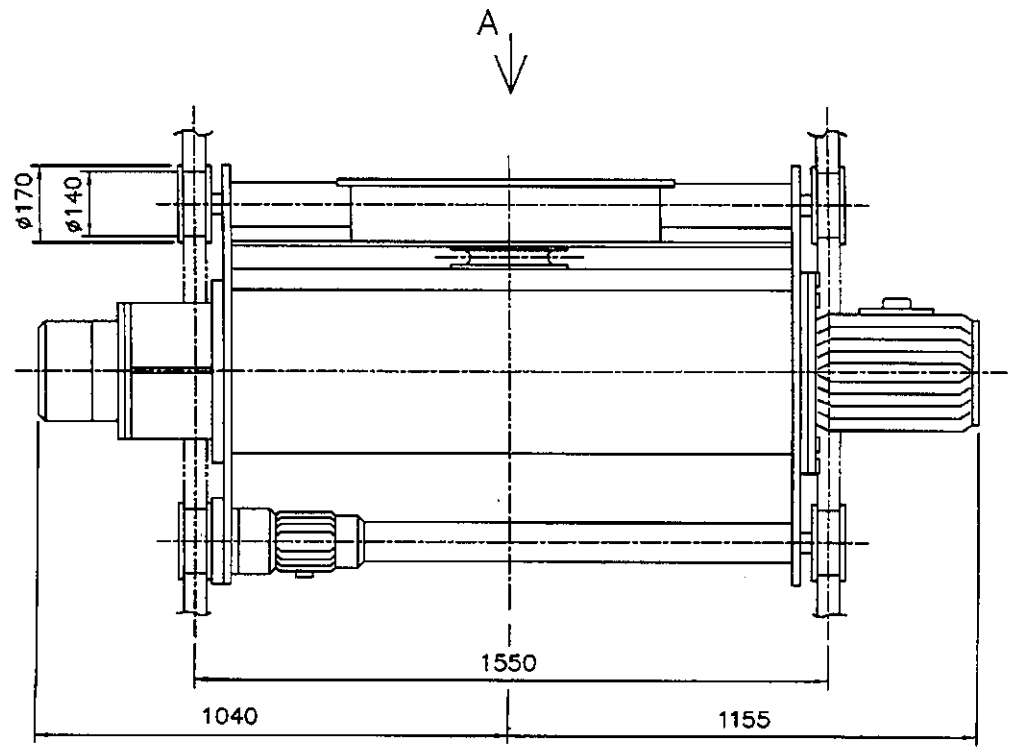

극동 호이스트
제한하중
2000 K

VIEW A

SPECIFICATION			
HOISTING LOAD			2 TON
TESTING LOAD			2.5 TON
LIFT			24 M
HOISTING	HIGH	SPEED	10 M/MIN
		MOTOR	3.7 KW x 4P
	LOW	SPEED	5 M/MIN
		MOTOR	1.8 KW x 8P
TRAVERS-ING	HIGH	SPEED	24 M/MIN
		MOTOR	0.75 KW x 4 P
	LOW	SPEED	16 M/MIN
		MOTOR	0.5 KW x 6 P
	DUAL HIGH	SPEED	24/12 M/MIN
		MOTOR	0.8/0.4 KW x 4/8 P
	DUAL LOW	SPEED	16/8 M/MIN
		MOTOR	0.5/0.25 KW x 6/12 P
WIRE ROPE			(6x19) ø8 x 4 FALLS
POWER SOURCE			AC3ø 220V(380,440,460,480)V 60Hz
TRAVERSING RAIL			15 KG/M
GROSS WEIGHT			590 KG

NO.	DESCRIPTION	MT'L	QTY SUB	QTY TOTAL	WEIGHT(Kg) SUB	WEIGHT(Kg) TOTAL	REMARKS.
5	T/S RAIL	–		–			15KG/M
4	UPPER LIMIT S/W	SS400		1			
3	SAFETY LATCH	SS400		1			
2	EMERGENCY S/W	–		1			
1	LOAD LIMITER	–		1			

PROJECT		DATE	DIM
			mm
TITLE	KD2-L24-D ARRANGEMENT DRAWING FOR HOIST	SCALE	PROJECTION
		A3/20	3rd

DRAWN	DESIGNED	CHECKED	APPROVED	REF. DRAWING

KD 극동호이스트 주식회사
KUK DONG HOIST CO., LTD.

SHEET No.

DWG No. KD2D – 240

불법복제 및 배포금지

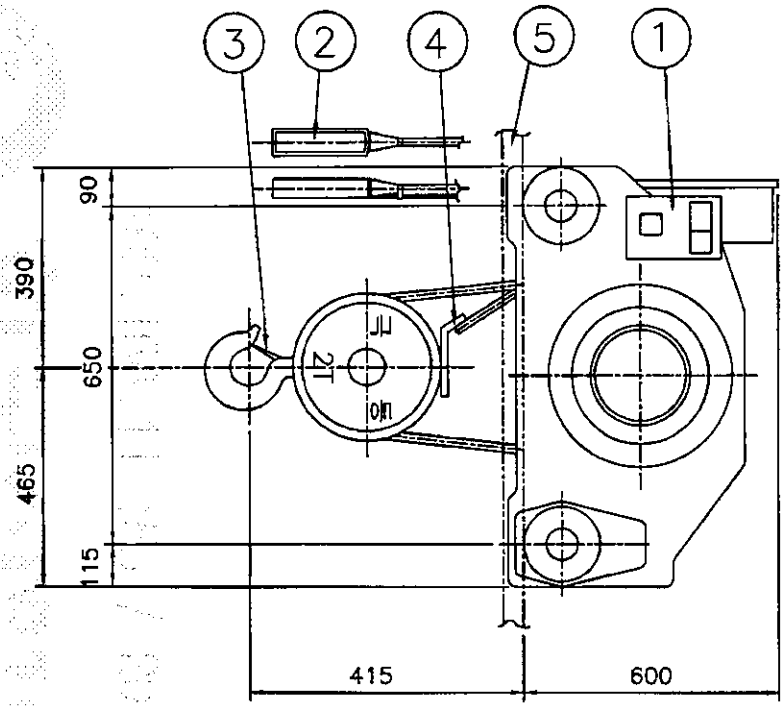

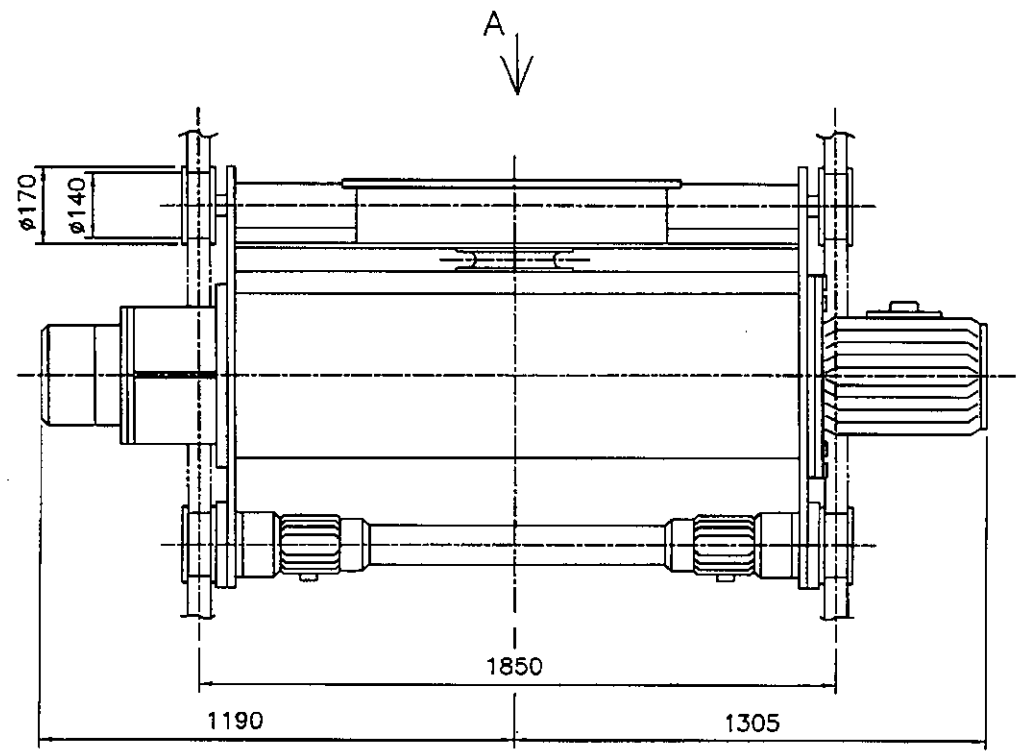

SPECIFICATION			
HOISTING LOAD			2 TON
TESTING LOAD			2.5 TON
LIFT			30 M
HOISTING	HIGH	SPEED	10 M/MIN
		MOTOR	3.7 KW x 4P
	LOW	SPEED	5 M/MIN
		MOTOR	1.8 KW x 8P
TRAVERS-ING	HIGH	SPEED	24 M/MIN
		MOTOR	0.75 KW x 4 P (2UNIT)
	LOW	SPEED	16 M/MIN
		MOTOR	0.5 KW x 6 P (2UNIT)
	DUAL HIGH	SPEED	24/12 M/MIN
		MOTOR	0.8/0.4 KW x 4/8 P (2UNIT)
	DUAL LOW	SPEED	16/8 M/MIN
		MOTOR	0.5/0.25 KW x 6/12 P (2UNIT)
WIRE ROPE			(6x19) ø8 x 4 FALLS
POWER SOURCE			AC3ø 220V(380,440,460,480)V 60Hz
TRAVERSING RAIL			15 KG/M
GROSS WEIGHT			680 KG

NO.	DESCRIPTION	MT'L	QTY SUB	QTY TOTAL	WEIGHT(Kg) SUB	WEIGHT(Kg) TOTAL	REMARKS.
5	T/S RAIL	–		–			15KG/M
4	UPPER LIMIT S/W	SS400		1			
3	SAFETY LATCH	SS400		1			
2	EMERGENCY S/W	–		1			
1	LOAD LIMITER	–		1			

PROJECT		DATE	DIM
		97.10.23.	mm
TITLE	KD2-L30-D ARRANGEMENT DRAWING FOR HOIST	SCALE	PROJECTION
		A3/20	3rd

DRAWN	DESIGNED	CHECKED	APPROVED	REF. DRAWING

KD 극동호이스트 주식회사
KUK DONG HOIST CO., LTD.

SHEET No.

DWG No. KD2D – 300

극동 호이스트
제한하중
2000 K

VIEW A

192.168.11.155 / 2011-06-17 15:51:43

불법복제 및 배포금지

192.168.11.155 / 2011-06-17 15:51:43

불법복제 및 배포금지

ADR'S NO.

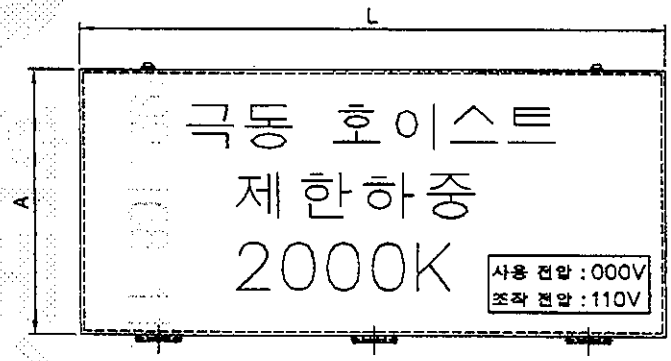

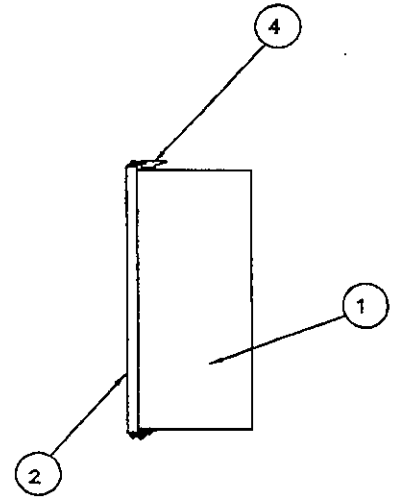

NO	DESCRIPTION	MT'L	REMARKS
1	PANEL CASE	SPC	1.6t
2	PANEL COVER	SPC	1.6t
3	HINGE	PUR'	
4	CLAMP	PUR'	
5	SPONGE	PUR'	

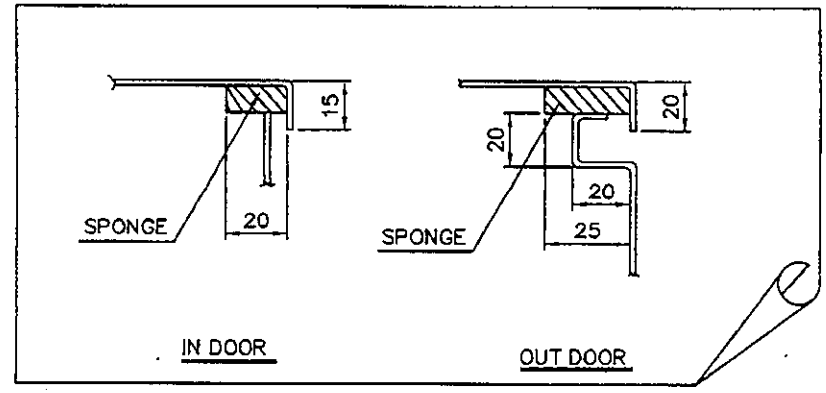

SELECTION	HOIST CAPACITY	DESCRIPTION	IN DOOR			OUT DOOR			REMARK
			A	B	L	A	B	L	
	2 TON	NORMAL	320	150	640	320	150	660	
		CREEP	320	150	640	320	150	660	

NOTE

1.PROTECTION DEGREE ;

A. INDOOR TYPE : DUST PROOF

B. OUT DOOR TYPE : SPLASH PROOF

2.FINAL PAINTING COLOR (MUNSELL NO.)

A. IN SIDE : 10B 3/5

B. OUT SIDE : 10B 3/5

3.PAINTING THICKNESS : ABOVE 40 um

4.APPLICATION VOLTAGE : 220V,380V,440V,460V,480V

5.제어용 전선 : 2.5sq KIV,HIV

6.외함 개방 구조는 다음과 같다.

1) 외함 개방시 충전부 부분이 차단되도록 한다.

2) 외함 개방 후 충전되어있는 부분은 IP2X 이상의 직접 접촉 방호가 되어있을것.

MK	DATE	REVISIONS	CHK.	APP.
4				
3				
2				
1				

CUSTOMER	
DRAWING TITLE	HOISTING CONTROL BOX
	LAY-OUT

DRAWING	DESIGN	CHECKED	APPROVED	SCALE	DATE	ORDER NO.
				NONE		

KD 극동호이스트 주식회사
KUK DONG HOIST CO., LTD.

DWG. NO KD02EB00

1	2	3	4	5	6	7	8	9	10	11	12	13	14	15	16	17	18	19	20

POWER CIRCUIT

TRAVELLING POWER SUPPLY SYSTEM

ADR'S NO. A1

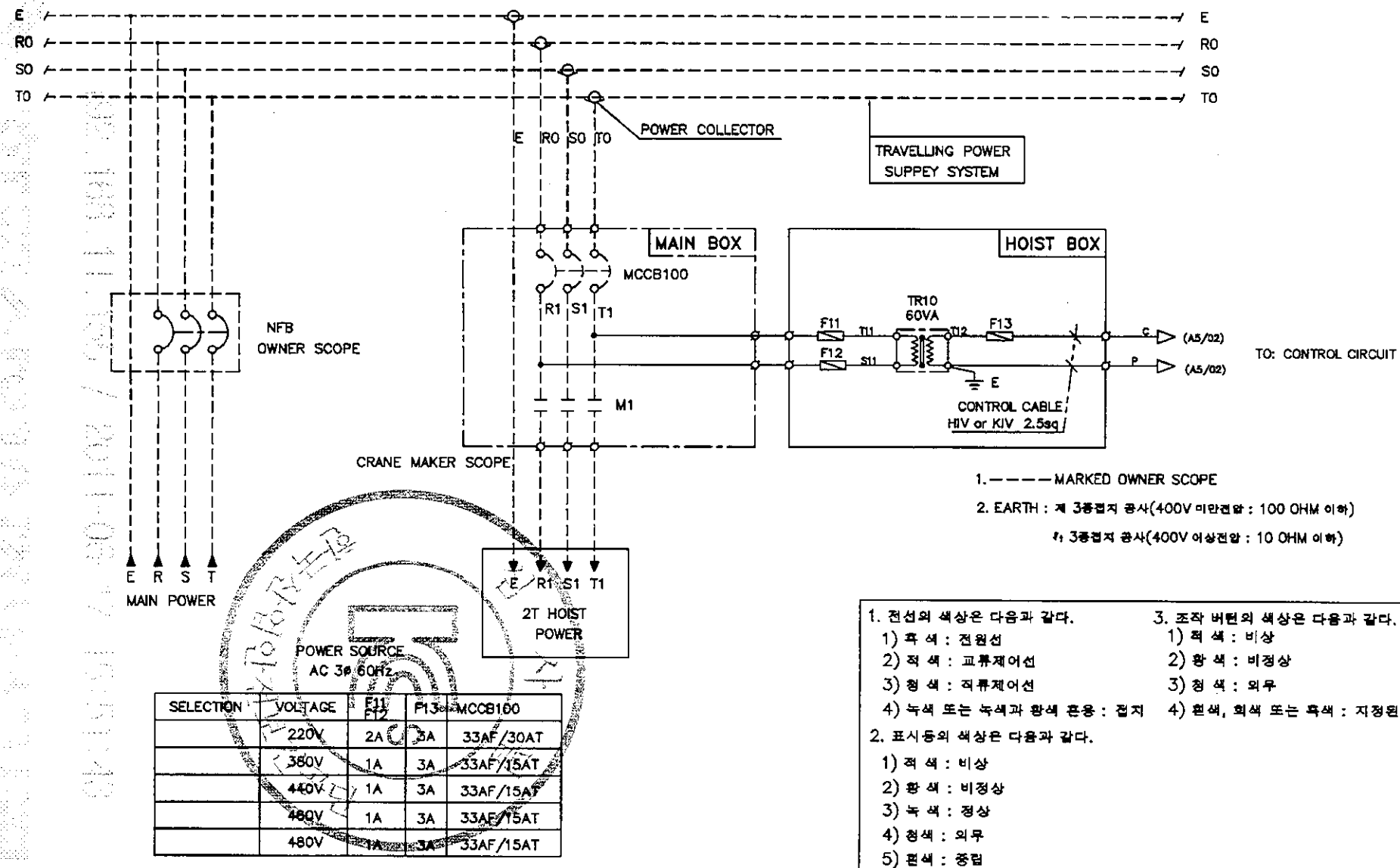

1.————MARKED OWNER SCOPE

2. EARTH : 제 3종접지 공사(400V 미만전압 : 100 OHM 이하)

※ 3종접지 공사(400V 이상전압 : 10 OHM 이하)

SELECTION	VOLTAGE	F11 F12	F13	MCCB100
	220V	2A	3A	33AF/30AT
	380V	1A	3A	33AF/15AT
	440V	1A	3A	33AF/15AT
	460V	1A	3A	33AF/15AT
	480V	1A	3A	33AF/15AT

1. 전선의 색상은 다음과 같다.
   1) 흑 색 : 전원선
   2) 적 색 : 교류제어선
   3) 청 색 : 직류제어선
   4) 녹색 또는 녹색과 황색 혼용 : 접지
2. 표시등의 색상은 다음과 같다.
   1) 적 색 : 비상
   2) 황 색 : 비정상
   3) 녹 색 : 정상
   4) 청색 : 외부
   5) 흰색 : 중립
3. 조작 버튼의 색상은 다음과 같다.
   1) 적 색 : 비상
   2) 황 색 : 비정상
   3) 청 색 : 외부
   4) 흰색, 회색 또는 흑색 : 지정된 의미없음

MK	DATE	REVISIONS	CHK.	APP.

CUSTOMER		DRAWING	DESIGN	CHECKED	APPROVED	SCALE	DATE	ORDER NO.
DRAWING TITLE	MAIN POWER CIRCUIT 1 DIAGRAM					NONE		
		극동호이스트 주식회사 KUK DONG HOIST CO., LTD.				DWG. NO	KD02E001	

192.168.11.155 / 2011-06-17 15:51:43

불법전재 및 배포금지

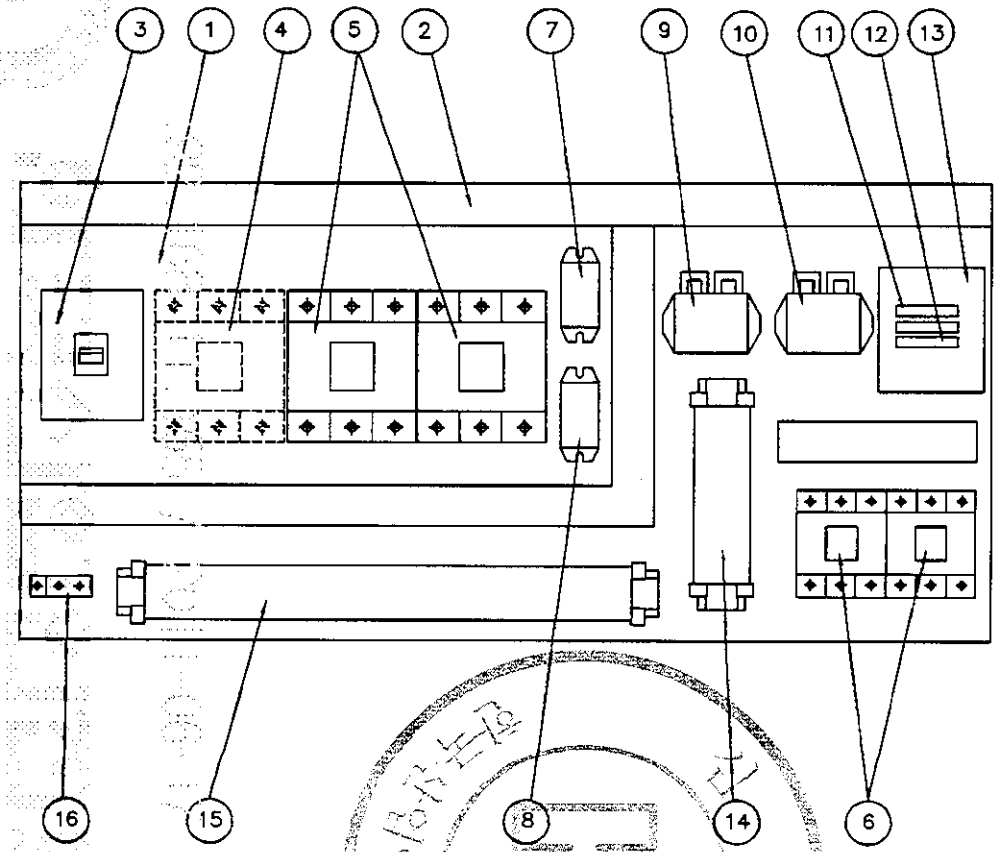

NO	DESCRIPTION	SPECIFICATION	Q'TY	REMARK
1	CHASSIS PLATE		1	아 연 도 금
2	CABLE DUCT	–	1	
3	N.F.B	33AF/30AT	1	HOISTING
4	MAGNET CONTACTOR	DOC–22P	1	MAIN MAG.
5	MAGNET CONTACTOR	DOC–40P	2	HOISTING
6	MAGNET CONTACTOR	DOC–22P	2	TRAVERSING
7	SILICON RECTIFIER	SR–30	1	HOISTING
8	SILICON RECTIFIER	SR–30	1	TRAVERSING
9	E.O.C.R	SS–30	1	HOISTING
10	E.O.C.R	SS–05	1	TRAVERSING
11	FUSE	2 A	2	
12	FUSE	3 A	1	
13	TRANSFORMER	220V/110,120V/100VA	1	
14	UPPER LIMIT	AC 600V/75A	1	
15	TERMINAL BLOCK	60A,15A		
16	EARTH TERMINAL	3tx20x50	1	

NOTE

1. UPPER LIMIT LS–1,LS–2의 접점 허용 전류 용량 : AC 600V, 75A
2. POWER SOURCE : AC. 3ø 220V 60HZ
3. EARTH TERMINAL RESISTANCE : 0.018Ω

NOTE

1. 전선의 색상은 다음과 같다.
   1) 흑색 : 교류 및 직류 전원선로
   2) 적색 : 교류제어회로
   3) 주황색 : 외부 전원에서 공급되는 연동장치 제어회로
   4) 녹색 또는 녹색과 황색 혼용 : 접지선
2. CABLE MATERIAL : KIV OR EQUIVALENT
   MIN SIZE : 2.5sq
3. 제어용 전선 : 2.5mm KIV,HIV
4. 제작시 다소 변경 될수있음.
5. 외함 개방구조는 다음과 같을것.
   1) 외함 개방시 충전부분이 차단되도록 할것.
   2) 외함 개방후 충전되어있는 부분은 IP2X 이상의 직접 접촉 방호가 되어있을것.

MK	DATE	REVISIONS	CHK.	APP.
4				
3				
2				
1				

CUSTOMER		DRAWING	DESIGN	CHECKED	APPROVED	SCALE	DATE	ORDER NO.
DRAWING TITLE	HOIST CONTROL BOX (고속)					NONE		
	ARRANGEMENT DRAWING	KD 극동호이스트 주식회사 KUK DONG HOIST CO., LTD.				DWG. NO	KD02BA21	

192.168.11.155 / 2011-06-17 15:51:43

불법복제 및 배포금지

192.168.11.155 / 2011-06-17 15:51:43

보관표배 금 배출물품

ADR'S NO.

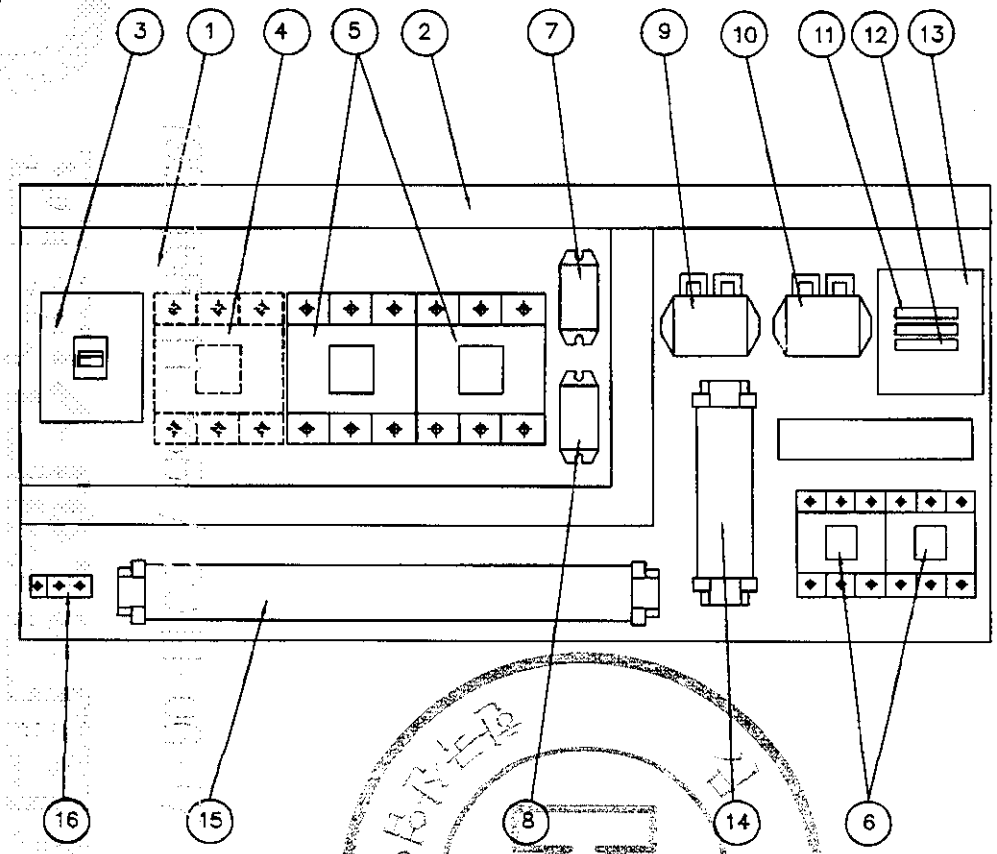

NO	DESCRIPTION	SPECIFICATION	Q'TY	REMARK
1	CHASSIS PLATE		1	아 연 도 금
2	CABLE DUCT	–	1	
3	N.F.B	33AF/20AT	1	HOISTING
4	MAGNET CONTACTOR	DOC–22P	1	MAIN MAG.
5	MAGNET CONTACTOR	DOC–22P	2	HOISTING
6	MAGNET CONTACTOR	DOC–22P	2	TRAVERSING
7	SILICON RECTIFIER	SR–30	1	HOISTING
8	SILICON RECTIFIER	SR–30	1	TRAVERSING
9	E.O.C.R	SS–30	1	HOISTING
10	E.O.C.R	SS–05	1	TRAVERSING
11	FUSE	1 A	2	
12	FUSE	2 A	1	
13	TRANSFORMER	220V/110,120V/ 60VA	1	
14	UPPER LIMIT	AC 600V/75A	1	
15	TERMINAL BLOCK	60A,15A		
16	EARTH TERMINAL	3tx20x50	1	

NOTE

1. UPPER LIMIT LS–1,LS–2의 접점 허용전류 용량 : AC 600V, 75A
2. POWER SOURCE : AC. 3ø 220V 60HZ
3. EARTH TERMINAL RESISTANCE : 0.018Ω

NOTE

1. 전선의 색상은 다음과 같다.
   1) 흑색 : 교류 및 직류 전원선로
   2) 적색 : 교류제어회로
   3) 주황색 : 외부 전원에서 공급되는 연동장치 제어회로
   4) 녹색 또는 녹색과 황색 혼용 : 접지선
2. CABLE MATERIAL : KIV OR EQUIVALENT
   MIN SIZE : 2.5sq
3. 제어용 전선 : 2.5mm KIV,HIV
4. 제작시 다소 변경 될수있음.
5. 외함 개방구조는 다음과 같을것.
   1) 외함 개방시 충전부분이 차단되도록 할것.
   2) 외함 개방후 충전되어있는 부분은 IP2X 이상의 직접 접촉 방호가 되어있을것.

MK	DATE	REVISIONS	CHK.	APP.
4				
3				
2				
1				

CUSTOMER		DRAWING	DESIGN	CHECKED	APPROVED	SCALE	DATE	ORDER NO.
DRAWING TITLE	HOIST CONTROL BOX (저속)					NONE		
	ARRANGEMENT DRAWING	극동호이스트 주식회사 KUK DONG HOIST CO., LTD.				DWG. NO	KD02BA22	

1	2	3	4	5	6	7	8	9	10	11	12	13	14	15	16	17	18	19	20
POWER CIRCUIT																			ADR'S NO.
HOISTING MOTION										TRAVERSING MOTION									B1

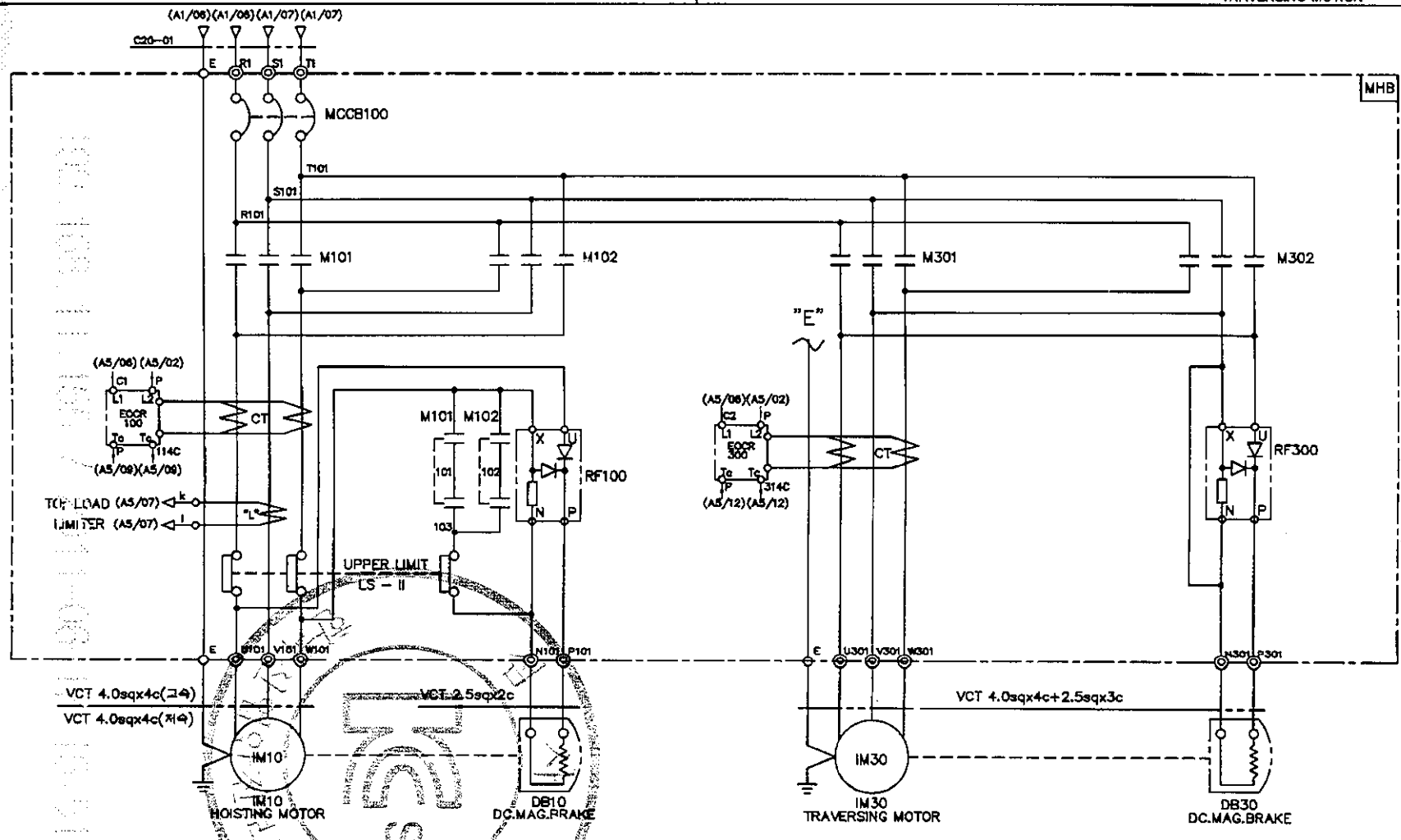

SPECIFICATION / SYMBOLS	HOISTING POWER	HOISTING MOTOR	TRAVERSING MOTOR	DC.MAG BRAKE	NO FUSE BREAKER	TRANSFORMER	FUSE		MAGNET CONTACTOR		UPPER LIMIT	ELECTRIC OVER CURRENT RELAY		SILICON RECTIFIER		LOAD LIMITER	CABLE
DESCRIPTION	HOIST	IM 10	IM 30	DB10, 30	MCCB100	TR 1	F11,F12	F13	M101,M102	M301,M302	LS-I, LS-II	EOCR100	EOCR300	RF100	RF300	LOAD LIMITER	C20-01
	2TON AC 3PH 220V 60Hz	3.7KW x 4P	0.75KW x 4P	DC 100V	DBE-33AF/30AT	220/110,120V/100VA	2A	3A	DOC-40P	DOC-22P	AC 600V 75A	SS-30	SS-05	SR-30	SR-30	JDL-100	VFCT 6sqx4c
	2TON AC 3PH 220V 60Hz	1.8KW x 8P	0.5KW x 6P	DC 100V	DBE-33AF/20AT	220/110,120V/60VA	1A	2A	DOC-22P	DOC-22P	AC 600V 75A	SS-30	SS-05	SR-30	SR-30	JDL-100	VFCT 6sqx4c
SELECTION / MAKER	KUKDONG				DAERYUK	SHINHAN	-		DAERYUK		KUKDONG	ASECO				JUNGHO	DONGIL

MK	DATE	REVISIONS	CHK.	APP.
4				
3				
2				
1				

CUSTOMER		DRAWING	DESIGN	CHECKED	APPROVED	SCALE	DATE	ORDER NO.
DRAWING TITLE	HOISTING POWER & CONTROL CIRCUIT DIAGRAM					NONE		
		KD 극동호이스트 주식회사 KUK DONG HOIST CO., LTD.				DWG. NO	KD02E22	

192.168.11.155 / 2011-06-17 15:51:43

192.168.11.155 / 2011-06-17 15:51:43

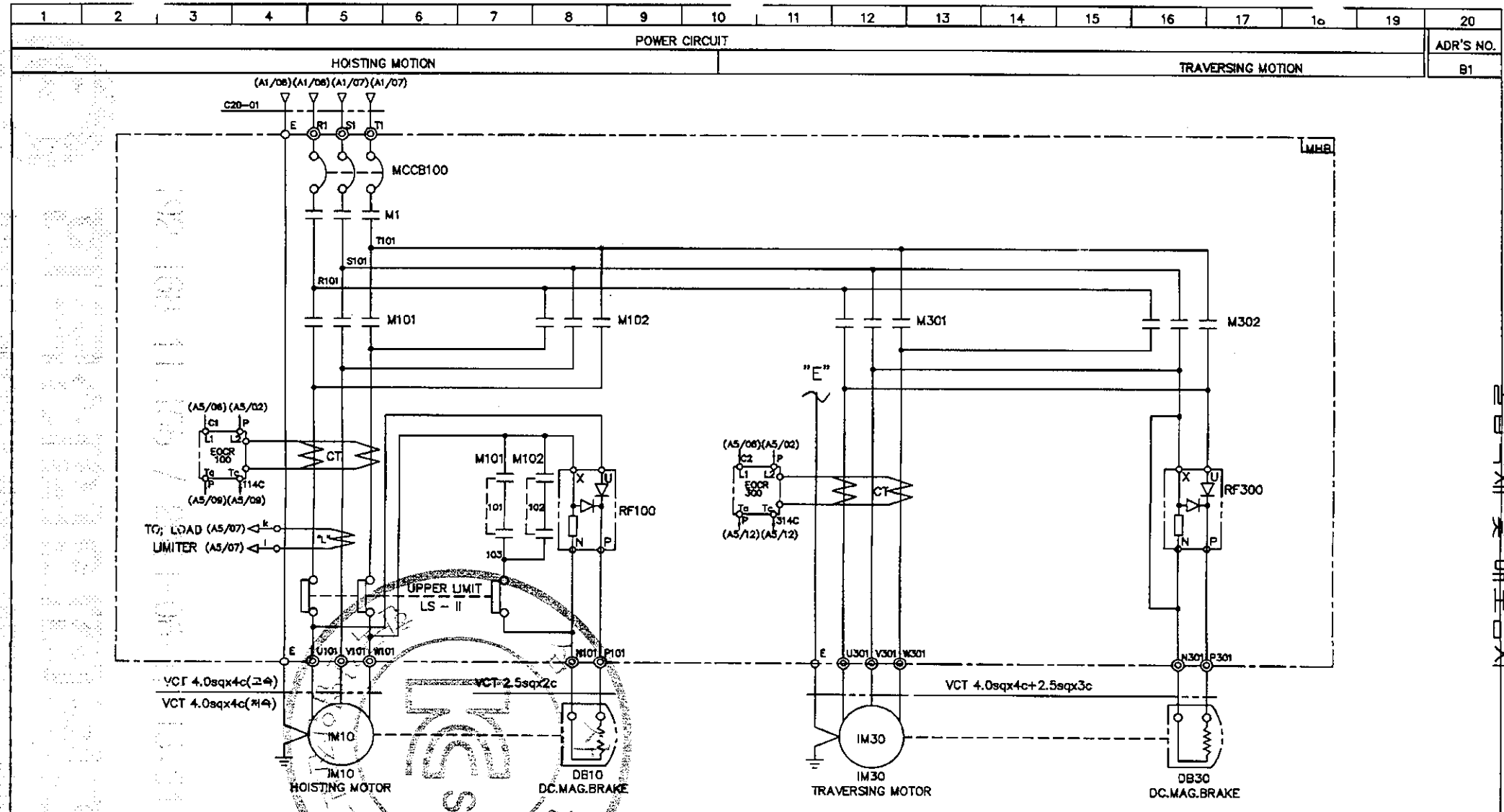

SPECIFICATION / SYMBOLS	HOISTING POWER	HOISTING MOTOR	TRAVERSING MOTOR	DC MAG. BRAKE	NO FUSE BREAKER	TRANSFORMER	FUSE		MAIN MAGNET	MAGNET CONTACTOR		UPPER LIMIT	ELECTRIC OVER CURRENT RELAY		SILICON RECTIFIER		LOAD LIMITER	CABLE
DESCRIPTION	HOIST	IM 10	IM 30	DB10, 30	MCCB100	TR 1	F11,F12	F13	M1	M101,M102	M301,M302	LS-I, LS-II	EOCR100	EOCR300	RF100	RF300	LOAD LIMITER	C20-01
	2TON AC 3PH 220V 60Hz	3.7KW x 4P	0.75KW x 4P	DC 100V	DBE-33AF/30AT	220/110,120V/100VA	2A	3A	DOC-22P	DOC-40P	DOC-22P	AC 600V 75A	SS-30	SS-05	SR-30	SR-30	JDL-100	VFCT 6sqx4c
	2TON AC 3PH 220V 60Hz	1.8KW x 8P	0.5KW x 6P	DC 100V	DBE-33AF/20AT	220/110,120V/60VA	1A	2A	DOC-22P	DOC-22P	DOC-22P	AC 600V 75A	SS-30	SS-05	SR-30	SR-30	JDL-100	VFCT 6sqx4c
SELECTION / MAKER	KUKDONG				DAERYUK	SHINHAN	–		DAERYUK			KUKDONG	ASECO				JUNGHO	DONGIL

MK	DATE	REVISIONS	CHK.	APP.
4				
3				
2				
1				

CUSTOMER		DRAWING	DESIGN	CHECKED	APPROVED	SCALE	DATE	ORDER NO.
DRAWING TITLE	HOISTING POWER & CONTROL CIRCUIT DIAGRAM					NONE		
		국동호이스트 주식회사 KUK DONG HOIST CO., LTD.				DWG. NO	KD02E21	

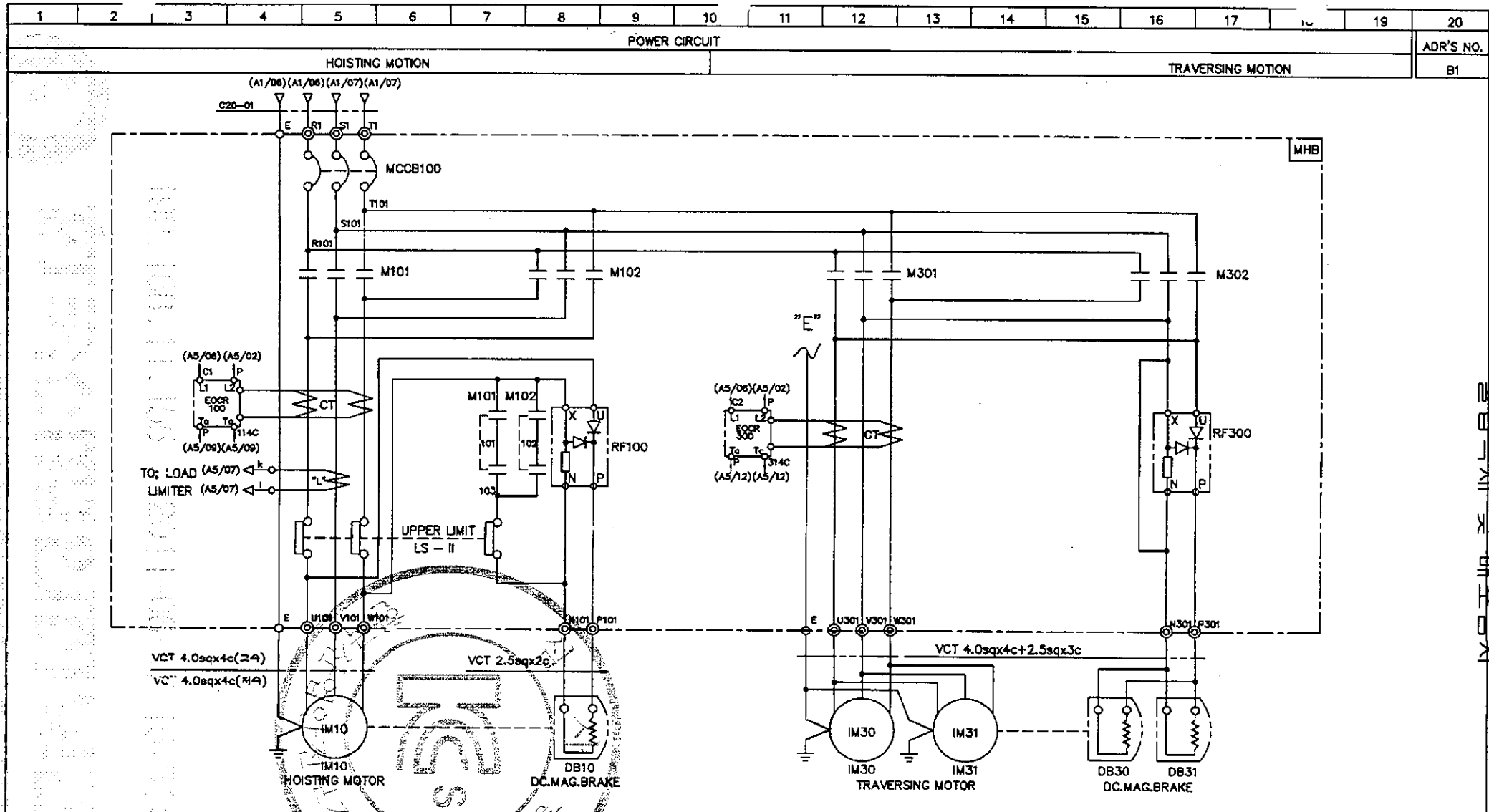

SPECIFICATION / SYMBOLS	HOISTING POWER	HOISTING MOTOR	TRAVERSING MOTOR	DC.MAG BRAKE	NO FUSE BREAKER	TRANSFORMER	FUSE		MAGNET CONTACTOR		UPPER LIMIT	ELECTRIC OVER CURRENT RELAY		SILICON RECTIFIER		LOAD LIMITER	CABLE
DESCRIPTION	HOIST	IM 10	IM 30,31	DB10, 30	MCCB100	TR 1	F11,F12	F13	M101,M102	M301,M302	LS-I, LS-II	EOCR100	EOCR300	RF100	RF300	LOAD LIMITER	C20-01
	2TON AC 3PH 220V 60Hz	3.7KW x 4P	0.75KW x 4P	DC 100V	DBE-33AF/30AT	220/110,120V/100VA	2A	3A	DOC-40P	DOC-22P	AC 600V 75A	SS-30	SS-30	SR-30	SR-30	JDL-100	VFCT 6sqx4c
	2TON AC 3PH 220V 60Hz	1.8KW x 6P	0.5KW x 6P	DC 100V	DBE-33AF/20AT	220/110,120V/60VA	1A	2A	DOC-22P	DOC-22P	AC 600V 75A	SS-30	SS-30	SR-30	SR-30	JDL-100	VFCT 6sqx4c
SELECTION / MAKER	KUKDONG				DAERYUK	SHINHAN	-		DAERYUK		KUKDONG	ASECO				JUNGHO	DONGIL

MK	DATE	REVISIONS	CHK.	APP.
4				
3				
2				
1				

CUSTOMER		DRAWING	DESIGN	CHECKED	APPROVED	SCALE	DATE	ORDER NO.
DRAWING TITLE	HOISTING POWER & CONTROL CIRCUIT DIAGRAM					NONE		

KD 극동호이스트 주식회사 KUK DONG HOIST CO., LTD.

DWG. NO KD02E24

192.168.11.155 / 2011-06-17 15:51:43

192.168.11.155 / 2011-06-17 15:51:43

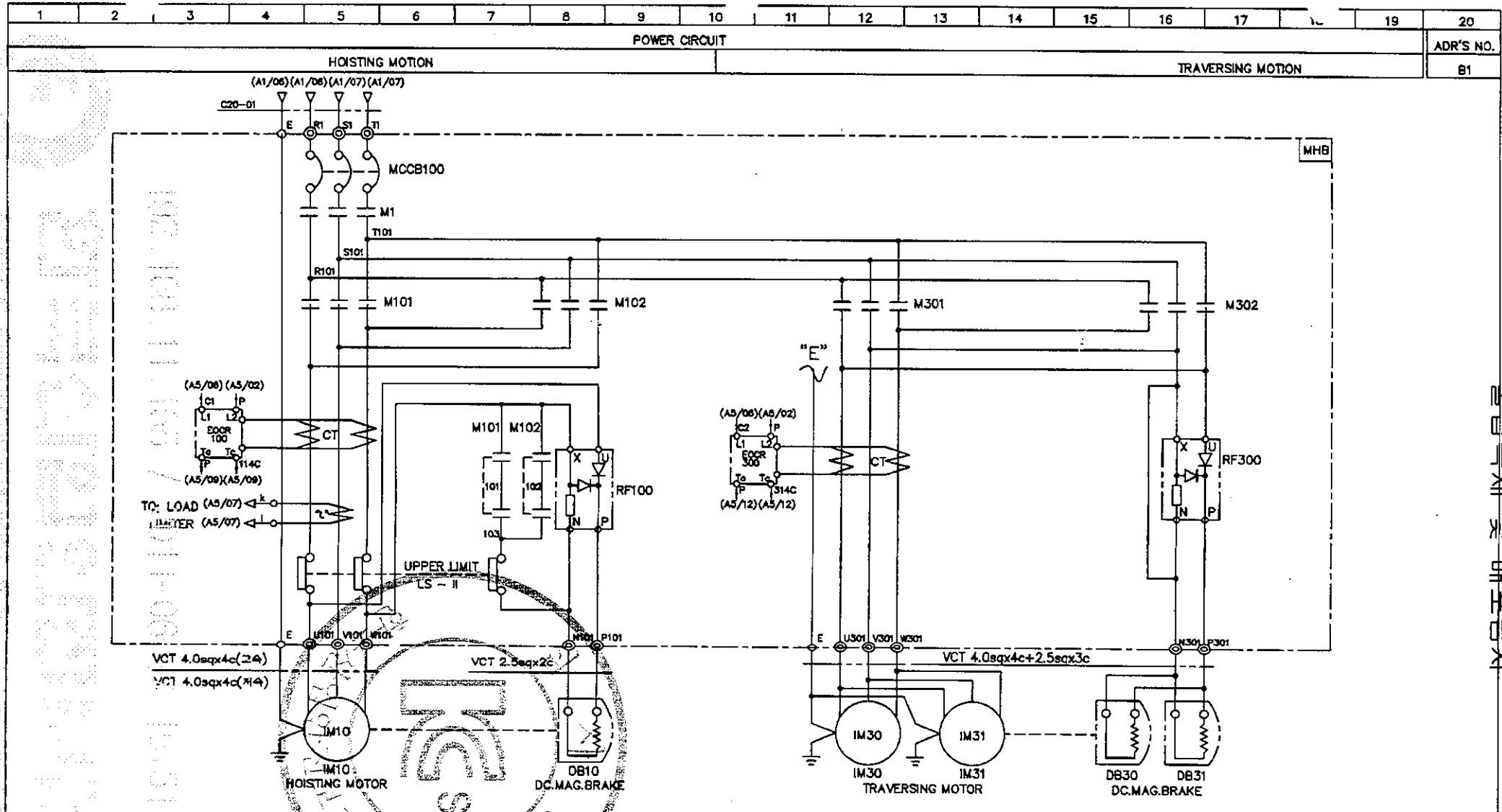

SPECIFICATION SYMBOLS	HOISTING POWER	HOISTING MOTOR	TRAVERSING MOTOR	DC.MAG BRAKE	NO FUSE BREAKER	TRANSFORMER	FUSE		MAIN MAGNET	MAGNET CONTACTOR		UPPER LIMIT	ELECTRIC OVER CURRENT RELAY		SILICON RECTIFIER		LOAD LIMITER	CABLE
DESCRIPTION	HOIST	IM 10	IM 30,31	DB10, 30	MCCB100	TR 1	F11,F12	F13	M1	M101,M102	M301,M302	LS-I, LS-II	EOCR100	EOCR300	RF100	RF300	LOAD LIMITER	C20-01
	2TON AC 3PH 220V 60Hz	3.7KW x 4P	0.75KW x 4P	DC 100V	DBE-33AF/30AT	220/110,120V/100VA	2A	3A	DOC-22P	DOC-40P	DOC-22P	AC 600V 75A	SS-30	SS-30	SR-30	SR-30	JDL-100	VFCT 6sqx4c
	2TON AC 3PH 220V 60Hz	1.8KW x 6P	0.5KW x 6P	DC 100V	DBE-33AF/20AT	220/110,120V/60VA	1A	2A	DOC-22P	DOC-22P	DOC-22P	AC 600V 75A	SS-30	SS-30	SR-30	SR-30	JDL-100	VFCT 6sqx4c
SELECTION MAKER	KUKDONG				DAERYUK	SHINHAN	–		DAERYUK			KUKDONG	ASECO				JUNGHO	DONGIL

MK	DATE	REVISIONS	CHK.	APP.
4				
3				
2				
1				

CUSTOMER		DRAWING	DESIGN	CHECKED	APPROVED	SCALE	DATE	ORDER NO.
DRAWING TITLE	HOISTING POWER & CONTROL CIRCUIT DIAGRAM					NONE		
		국동호이스트 주식회사 KUK DONG HOIST CO., LTD.				DWG. NO	KD02E23	

1	2	3	4	5	6	7	8	9	10	11	12	13	14	15	16	17	18	19	20

POWER CIRCUIT

TRAVERSING MOTION

ADR'S NO. C2

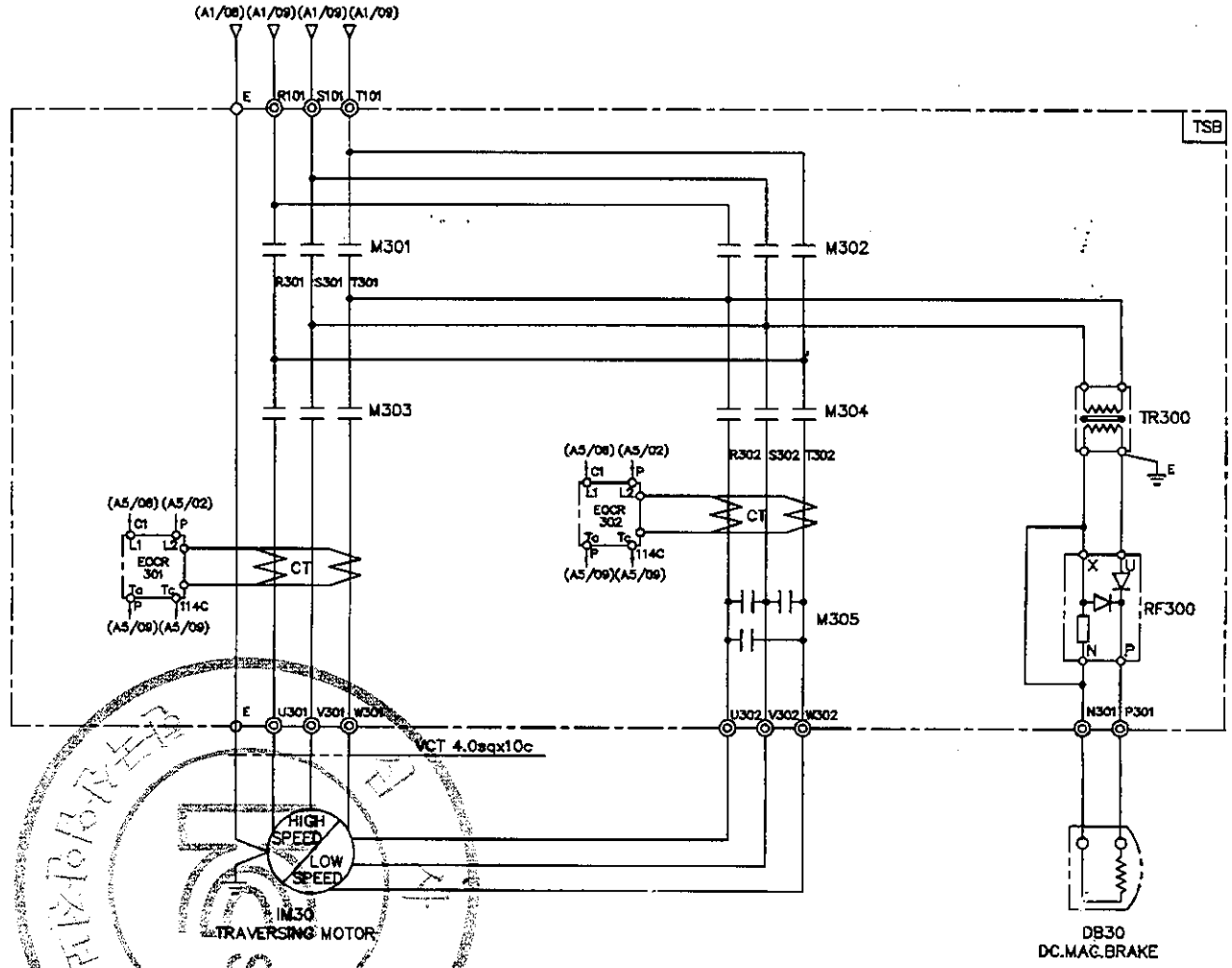

SPECIFICATION / SYMBOLS		TRAVERSING MOTOR	DC MAG' BRAKE	MAGNET CONTACTOR		SILICON RECTIFIER	ELECTRIC OVER CURRENT RELAY	TRANSFORMER
DESCRIPTION		IM30	DB30	M301 , M302 , M303	M304 , M305	RF 300	EOCR 301,302	TR300
	220V	0.5/0.25KWx6/12P AC3PH 220V 60Hz	DC 100V	DOC-22P	DOC-22R	SR-30	SS-05	AC220/220V, 300VA
	220V	0.8/0.4KWx4/8P AC3PH 220V 60Hz	DC 100V	DOC-22P	DOC-22R	SR-30	SS-05	AC220/220V, 300VA
SELECTION / MAKER		KUKDONG		DAERYUK		ASECO		SHINHAN

MK	DATE	REVISIONS	CHK.	APP.
4				
3				
2				
1				

CUSTOMER		DRAWING	DESIGN	CHECKED	APPROVED	SCALE	DATE	ORDER NO.
DRAWING TITLE	TRAVERSING POWER CONTROL CIRCUIT DIAGRAM					NONE		
		국동호이스트 주식회사 KUK DONG HOIST CO., LTD.				DWG. NO	KD02E25	

192.168.11.155 / 2011-06-17 15:51:43

POWER CIRCUIT

TRAVERSING MOTION

ADR'S NO. C2

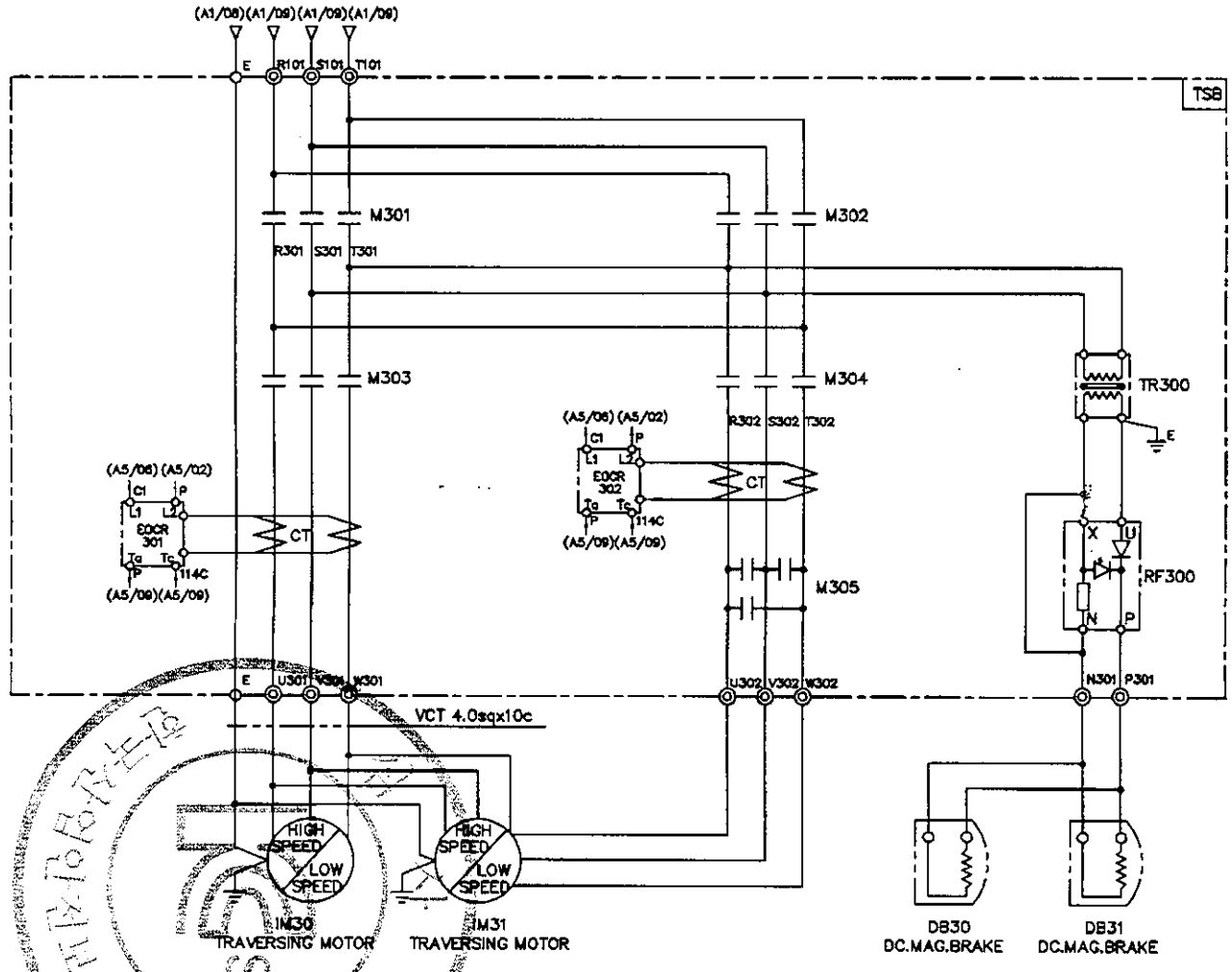

SPECIFICATION / SYMBOLS / DESCRIPTION		TRAVERSING MOTOR	DC MAG' BRAKE	MAGNET CONTACTOR		SILICON RECTIFIER	ELECTRIC OVER CURRENT RELAY	TRANSFORMER
		1M 30, 1M31	DB30 , DB31	M301 , M302 , M303	M304 , M305	RF 300	EOCR 301,302	TR300
	220V	0.5/0.25KWx6/12P AC3PH 220V 60Hz	DC 100V	DOC-22P	DOC-22R	SR-30	SS-30	AC220/220V, 300VA
	220V	0.8/0.4KWx4/8P AC3PH 220V 60Hz	DC 100V	DOC-22P	DOC-22R	SR-30	SS-30	AC220/220V, 300VA
SELECTION MAKER		KUKDONG		DAERYUK		ASECO		SHINHAN

MK	DATE	REVISIONS	CHK.	APP.
4				
3				
2				
1				

CUSTOMER		DRAWING	DESIGN	CHECKED	APPROVED	SCALE	DATE	ORDER NO.
DRAWING TITLE	TRAVERSING POWER CONTROL CIRCUIT DIAGRAM					NONE		
		KD 국동호이스트 주식회사 KUK DONG HOIST CO., LTD.				DWG. NO	KD02E26	

192.168.11.155 / 2011-06-17 15:51:43

192.168.11.155 / 2011-06-17 15:51:43

무단전재 및 배포금지

ADR'S NO.

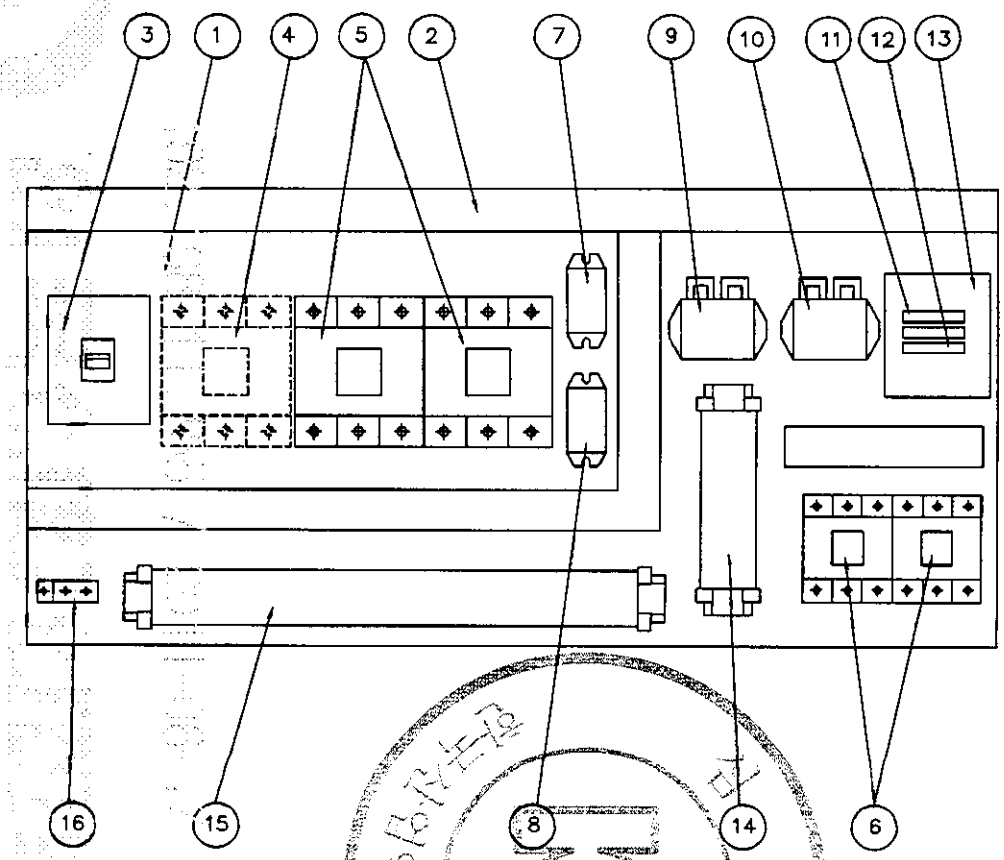

NO	DESCRIPTION	SPECIFICATION	Q'TY	REMARK
1	CHASSIS PLATE		1	아 연 도 금
2	CABLE DUCT	–	1	
3	N.F.B	33AF/15AT	1	HOISTING
4	MAGNET CONTACTOR	DOC–22P	1	MAIN MAG.
5	MAGNET CONTACTOR	DOC–22P	2	HOISTING
6	MAGNET CONTACTOR	DOC–22P	2	TRAVERSING
7	SILICON RECTIFIER	SR–30	1	HOISTING
8	SILICON RECTIFIER	SR–30	1	TRAVERSING
9	E.O.C.R	SS–30	1	HOISTING
10	E.O.C.R	SS–05	1	TRAVERSING
11	FUSE	1 A	2	
12	FUSE	3 A	1	
13	TRANSFORMER	380V/110,120V/60VA	1	
14	UPPER LIMIT	AC 600V/75A	1	
15	TERMINAL BLOCK	60A,15A		
16	EARTH TERMINAL	3tx20x50	1	

NOTE

1. UPPER LIMIT LS–1,LS–2의 접점 허용 전류 용량 : AC 600V, 75A
2. POWER SOURCE : AC. 3ø 380V 60HZ
3. EARTH TERMINAL RESISTANCE : 0.018Ω

NOTE

1. 전선의 색상은 다음과 같다.
   1) 흑색 : 고류 및 직류 전원선로
   2) 적색 : 고류제어회로
   3) 주황색 : 외부 전원에서 공급되는 연동장치 제어회로
   4) 녹색 또는 녹색과 황색 혼용 : 접지선
2. CABLE MATERIAL : KIV OR EQUIVALENT
   MIN SIZE : 2.5sq
3. 제어용 전선 : 2.5mm KIV,HIV
4. 제작시 다소 변경 될수있음.
5. 외함 개방구조는 다음과 같을것.
   1) 외함 개방시 충전부분이 차단되도록 할것.
   2) 외함 개방후 충전되어있는 부분은 IP2X 이상의 직접 접촉 방호가 되어있을것.

MK	DATE	REVISIONS	CHK.	APP.
4				
3				
2				
1				

CUSTOMER		DRAWING	DESIGN	CHECKED	APPROVED	SCALE	DATE	ORDER NO.
DRAWING TITLE	HOIST CONTROL BOX (고속)					NONE		
	ARRANGEMENT DRAWING	국동호이스트 주식회사 KUK DONG HOIST CO., LTD.				DWG. NO	KD02BA31	

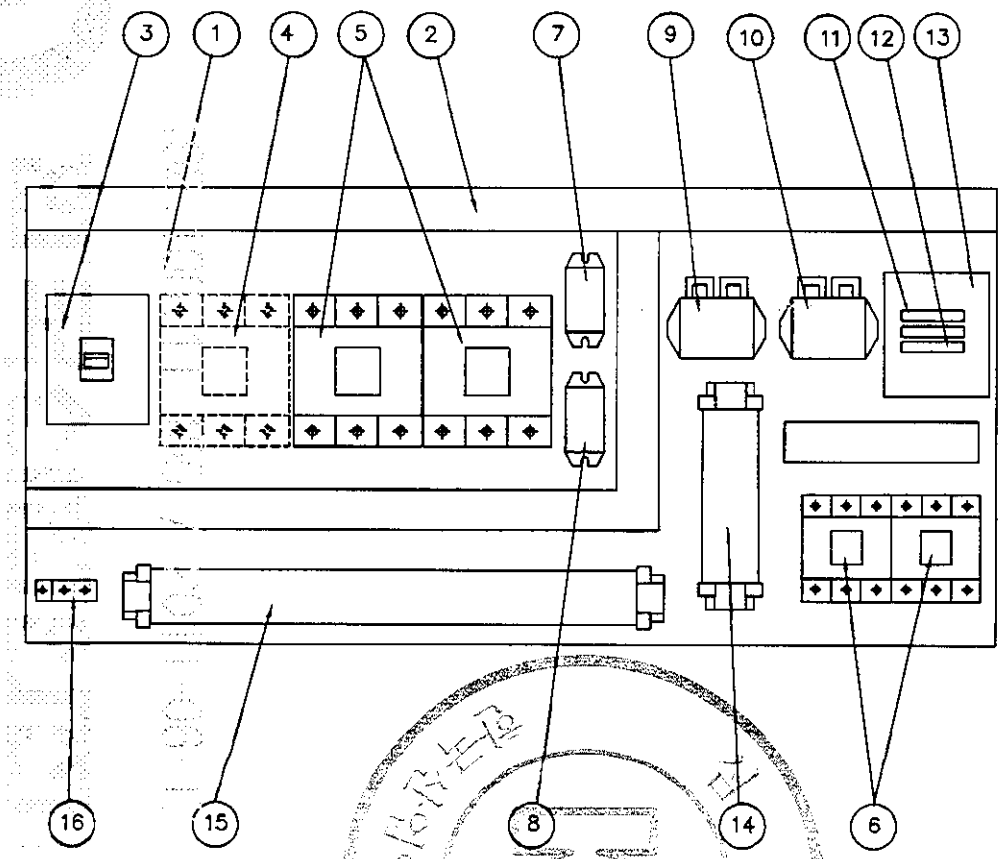

NOTE

1. UPPER LIMIT LS-1,LS-2의 접점 허용 전류 용량 : AC 600V, 75A
2. POWER SOURCE : AC. 3ø 380V 60HZ
3. EARTH TERMINAL RESISTANCE : 0.018Ω

NO	DESCRIPTION	SPECIFICATION	Q'TY	REMARK
1	CHASSIS PLATE		1	아 연 도 금
2	CABLE DUCT	–	1	
3	N.F.B	33AF/15AT	1	HOISTING
4	MAGNET CONTACTOR	DOC-22P	1	MAIN MAG.
5	MAGNET CONTACTOR	DOC-22P	2	HOISTING
6	MAGNET CONTACTOR	DOC-22P	2	TRAVERSING
7	SILICON RECTIFIER	SR-30	1	HOISTING
8	SILICON RECTIFIER	SR-30	1	TRAVERSING
9	E.O.C.R	SS-30	1	HOISTING
10	E.O.C.R	SS-05	1	TRAVERSING
11	FUSE	1 A	2	
12	FUSE	2 A	1	
13	TRANSFORMER	380V/110,120V/ 60VA	1	
14	UPPER LIMIT	AC 600V/75A	1	
15	TERMINAL BLOCK	60A,15A		
16	EARTH TERMINAL	3tx20x50	1	

NOTE

1. 전선의 색상은 다음과 같다.
   1) 흑색 : 교류 및 직류 전원선로
   2) 적색 : 교류제어회로
   3) 주황색 : 외부 전원에서 공급되는 연동장치 제어회로
   4) 녹색 또는 녹색과 황색 혼용 : 접지선
2. CABLE MATERIAL : KIV OR EQUIVALENT
   MIN SIZE : 2.5sq
3. 제어용 전선 : 2.5mm KIV,HIV
4. 제작시 다소 변경 될수있음.
5. 외함 개방구조는 다음과 같을것.
   1) 외함 개방시 충전부분이 차단되도록 할것.
   2) 외함 개방후 충전되어있는 부분은 IP2X 이상의 직접 접촉 방호가 되어있을것.

MK	DATE	REVISIONS	CHK.	APP.
4				
3				
2				
1				

CUSTOMER	
DRAWING TITLE	HOIST CONTROL BOX (저속)
	ARRANGEMENT DRAWING

DRAWING	DESIGN	CHECKED	APPROVED	SCALE	DATE	ORDER NO.
				NONE		

KD 극동호이스트 주식회사 KUK DONG HOIST CO., LTD.

DWG. NO KD02BA32

ADR'S NO.

볼법복제 및 배포금지

192.168.11.155 / 2011-06-17 15:51:43

192.168.11.155 / 2011-06-17 15:51:43

무단전재 및 배포금지

POWER CIRCUIT

ADR'S NO. B1

HOISTING MOTION | TRAVERSING MOTION

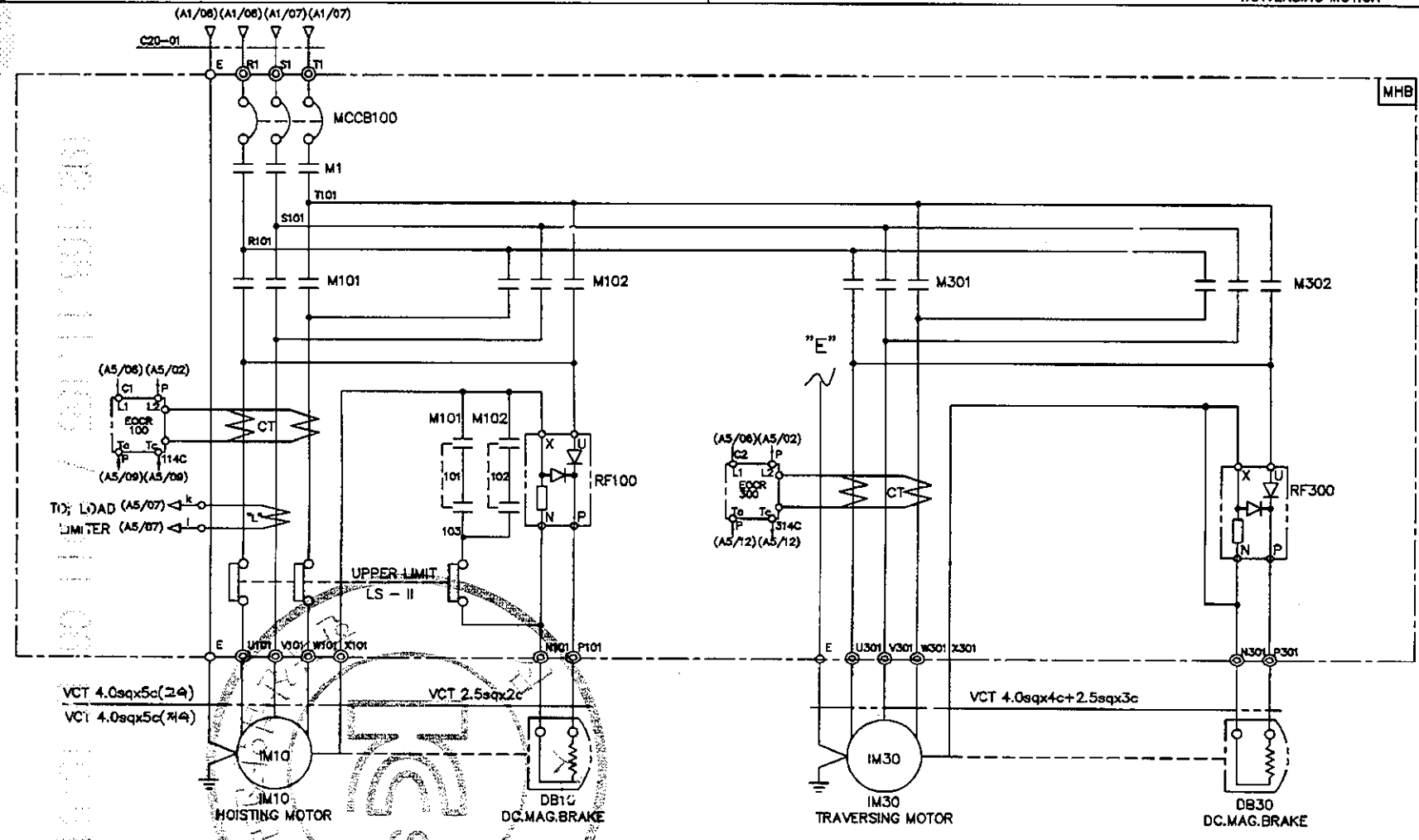

SPECIFICATION / SYMBOLS	HOISTING POWER	HOISTING MOTOR	TRAVERSING MOTOR	DC.MAG. BRAKE	NO FUSE BREAKER	TRANSFORMER	FUSE		MAIN MAGNET	MAGNET CONTACTOR		UPPER LIMIT	ELECTRIC OVER CURRENT RELAY		SILICON RECTIFIER		LOAD LIMITER	CABLE
DESCRIPTION	HOIST	IM 10	IM 30	DB10, 30	MCCB100	TR 1	F11,F12	F13	M1	M101,M102	M301,M302	LS-I, LS-II	EOCR100	EOCR300	RF100	RF300	LOAD LIMITER	C20-01
	2TON AC 3PH 380V 60Hz	3.7KW x 4P	0.75KW x 4P	DC 100V	DBE-33AF/15AT	380/110,120V/60VA	1A	3A	DOC-22P	DOC-22P	DOC-22P	AC 600V 75A	SS-30	SS-05	SR-30	SR-30	JDL-100	VFCT 4.0sqx4c
	2TON AC 3PH 380V 60Hz	1.8KW x 8P	0.5KW x 6P	DC 100V	DBE-33AF/15AT	380/110,120V/60VA	1A	2A	DOC-22P	DOC-22P	DOC-22P	AC 600V 75A	SS-30	SS-05	SR-30	SR-30	JDL-100	VFCT 4.0sqx4c
SELECTION MAKER	KUKDONG				DAERYUK	SHINHAN	–		DAERYUK			KUKDONG	ASECO				JUNGHO	DONGIL

MK	DATE	REVISIONS	CHK.	APP.
4				
3				
2				
1				

CUSTOMER		DRAWING	DESIGN	CHECKED	APPROVED	SCALE	DATE	ORDER NO.
DRAWING TITLE	HOISTING & T/S POWER CONTROL CIRCUIT DIAGRAM					NONE		
		국동호이스트 주식회사 KUK DONG HOIST CO., LTD.				DWG. NO	KD02E31	

1	2	3	4	5	6	7	8	9	10	11	12	13	14	15	16	17	18	19	20
POWER CIRCUIT																			ADR'S NO.
HOISTING MOTION													TRAVERSING MOTION						B1

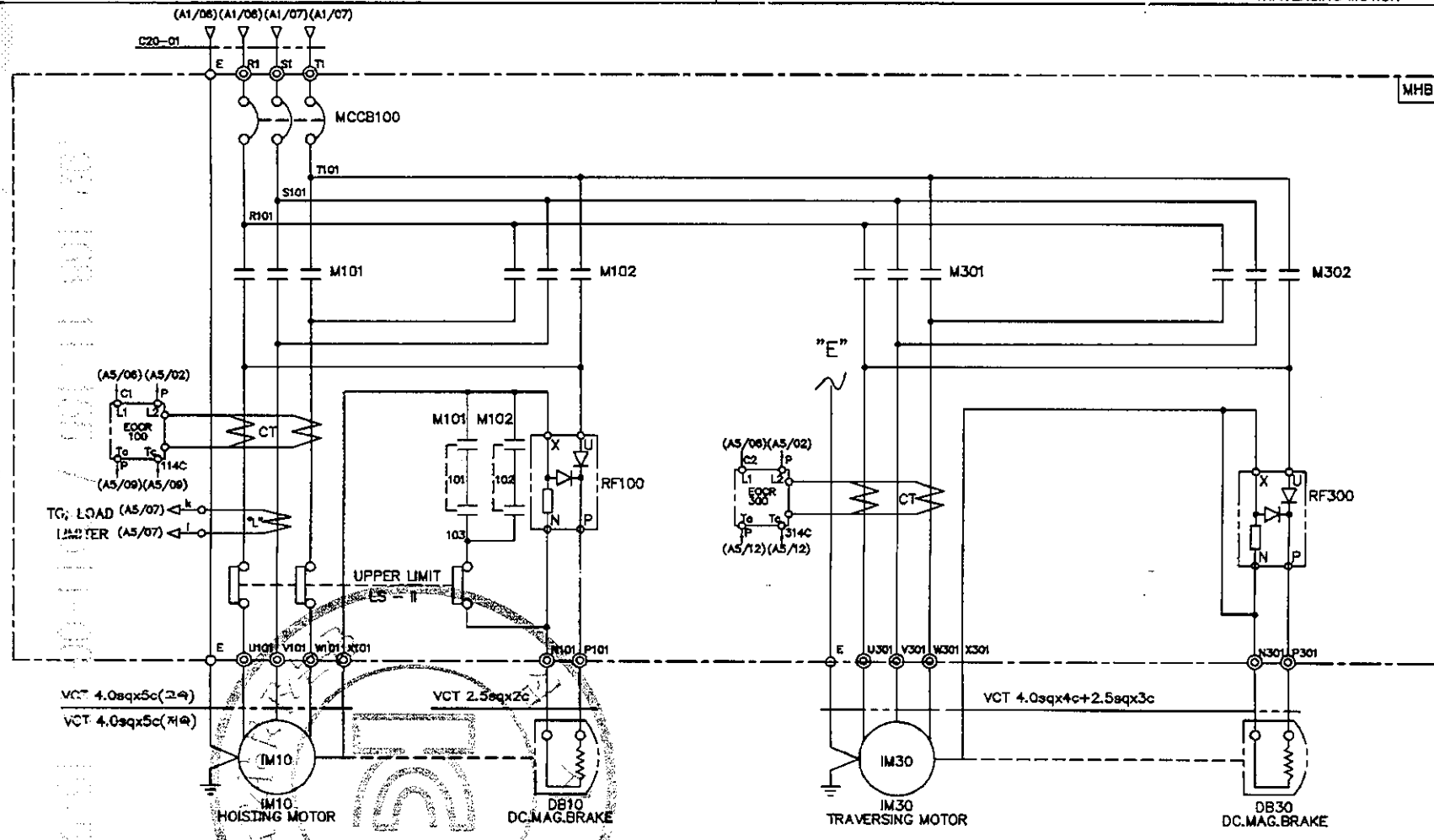

SPECIFICATION / SYMBOLS / DESCRIPTION	HOISTING POWER	HOISTING MOTOR	TRAVERSING MOTOR	DC.MAG BRAKE	NO FUSE BREAKER	TRANSFORMER	FUSE		MAGNET CONTACTOR		UPPER LIMIT	ELECTRIC OVER CURRENT RELAY		SILICON RECTIFIER		LOAD LIMITER	CABLE
	HOIST	IM 10	IM 30	DB10, 30	MCCB100	TR 1	F11,F12	F13	M101,M102	M301,M302	LS-I, LS-II	EOCR100	EOCR300	RF100	RF300	LOAD LIMITER	C20-01
	2TON AC 3PH 380V 60Hz	3.7KW x 4P	0.75KW x 4P	DC 100V	DBE-33AF/15AT	380/110,120V/60VA	1A	3A	DOC-22P	DOC-22P	AC 600V 75A	SS-30	SS-05	SR-30	SR-30	JDL-100	VFCT 4.0sqx4c
	2TON AC 3PH 380V 60Hz	1.8KW x 8P	0.5KW x 6P	DC 100V	DBE-33AF/15AT	380/110,120V/60VA	1A	2A	DOC-22P	DOC-22P	AC 600V 75A	SS-30	SS-05	SR-30	SR-30	JDL-100	VFCT 4.0sqx4c
SELECTION / MAKER	KUKDONG				DAERYUK	SHINHAN	-		DAERYUK		KUKDONG	ASECO				JUNGHO	DONGIL

MK	DATE	REVISIONS	CHK.	APP.
4				
3				
2				
1				

CUSTOMER		DRAWING	DESIGN	CHECKED	APPROVED	SCALE	DATE	ORDER NO.
DRAWING TITLE	HOISTING & T/S POWER CONTROL CIRCUIT DIAGRAM					NONE		
		KD 극동호이스트 주식회사 KUK DONG HOIST CO., LTD.				DWG. NO	KD02E32	

192.168.11.155 / 2011-06-17 15:51:43

192.168.11.155 / 2011-06-17 15:51:43

비상용 및 일반용 전기 설비 공사

1	2	3	4	5	6	7	8	9	10	11	12	13	14	15	16	17	18	19	20

POWER CIRCUIT

ADR'S NO. B1

HOISTING MOTION | TRAVERSING MOTION

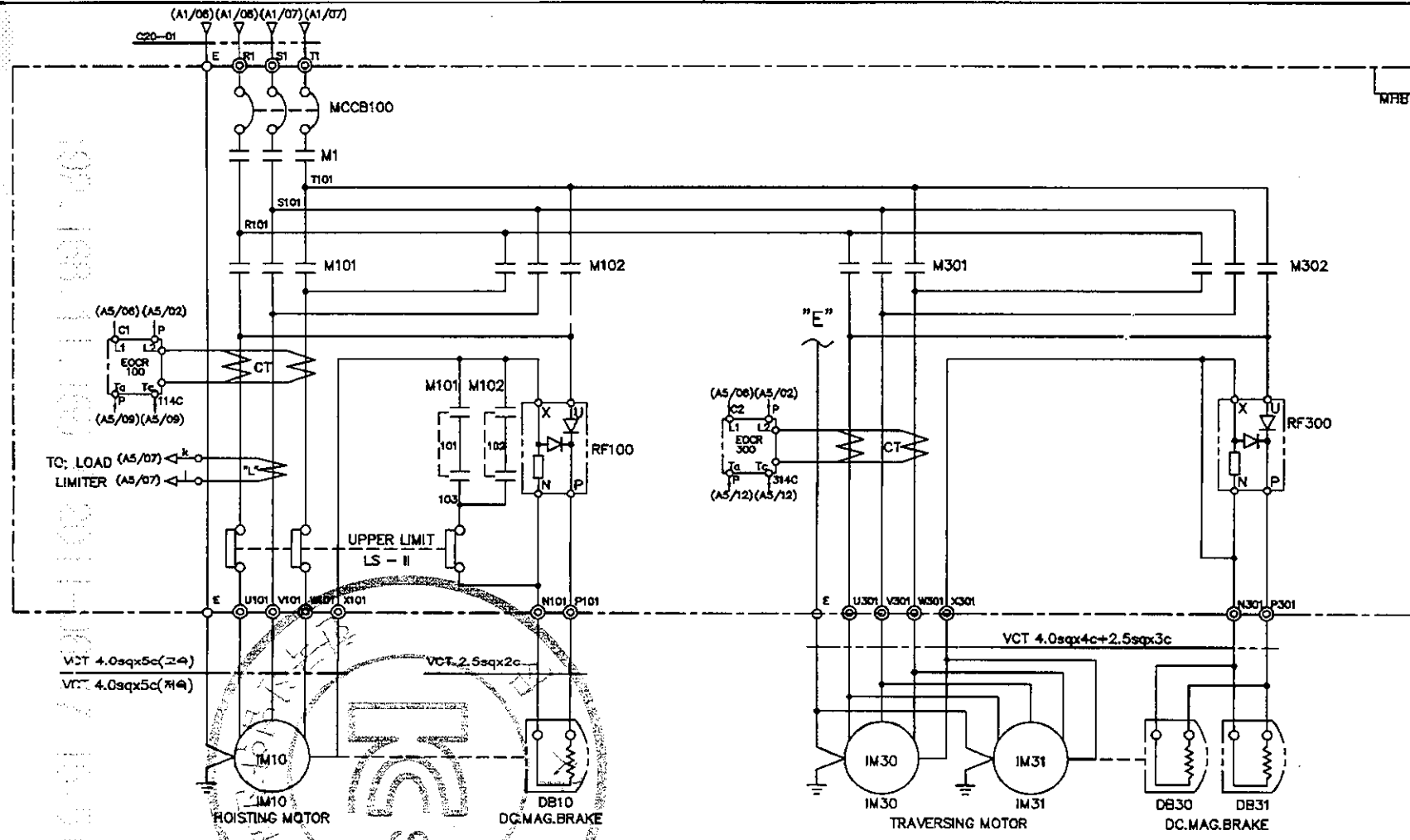

SPECIFICATION / SYMBOLS / DESCRIPTION	HOISTING POWER	HOISTING MOTOR	TRAVERSING MOTOR	DC.MAG. BRAKE	NO FUSE BREAKER	TRANSFORMER	FUSE		MAIN MAGNET	MAGNET CONTACTOR		UPPER LIMIT	ELECTRIC OVER CURRENT RELAY		SILICON RECTIFIER		LOAD LIMITER	CABLE
	HOIST	IM 10	IM 30,31	DB10, 30	MCCB100	TR 1	F11,F12	F13	M1	M101,M102	M301,M302	LS-I, LS-II	EOCR100	EOCR300	RF100	RF300	LOAD LIMITER	C20-01
	2TON AC 3PH 380V 60Hz	3.7KW x 4P	0.75KW x 4P	DC 100V	DBE-33AF/15AT	380/110,120V/60VA	1A	3A	DOC-22P	DOC-22P	DOC-22P	AC 600V 75A	SS-30	SS-05	SR-30	SR-30	JDL-100	VFCT 4.0sqx4c
	2TON AC 3PH 380V 60Hz	1.8KW x 8P	0.5KW x 6P	DC 100V	DBE-33AF/15AT	380/110,120V/60VA	1A	2A	DOC-22P	DOC-22P	DOC-22P	AC 600V 75A	SS-30	SS-05	SR-30	SR-30	JDL-100	VFCT 4.0sqx4c
SELECTION / MAKER	KUKDONG				DAERYUK	SHINHAN	–		DAERYUK			KUKDONG	ASECO				JUNGHO	DONGIL

MK	DATE	REVISIONS	CHK.	APP.
4				
3				
2				
1				

CUSTOMER		DRAWING	DESIGN	CHECKED	APPROVED	SCALE	DATE	ORDER NO.
DRAWING TITLE	HOISTING POWER & CONTROL CIRCUIT DIAGRAM					NONE		
		KD 국동호이스트 주식회사 KUK DONG HOIST CO., LTD.				DWG. NO	KD02E33	

192.168.11.155 / 2011-06-17 15:51:43

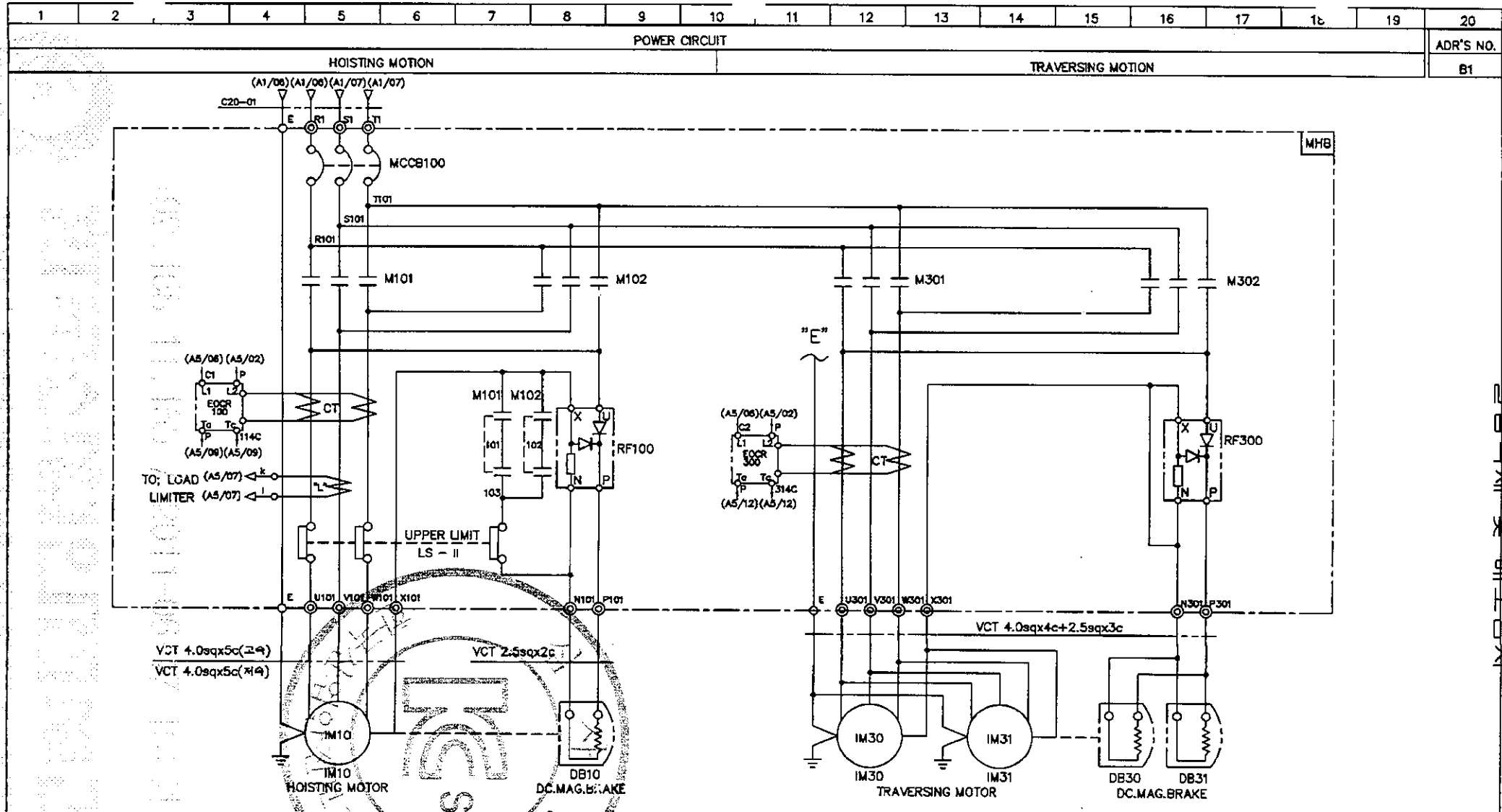

SPECIFICATION / SYMBOLS	HOISTING POWER	HOISTING MOTOR	TRAVERSING MOTOR	DC MAG BRAKE	NO FUSE BREAKER	TRANSFORMER	FUSE		MAGNET CONTACTOR		UPPER LIMIT	ELECTRIC OVER CURRENT RELAY		SILICON RECTIFIER		LOAD LIMITER	CABLE
DESCRIPTION	HOIST	IM 10	IM 30,31	DB10, 30	MCCB100	TR 1	F11,F12	F13	M101,M102	M301,M302	LS-I, LS-II	EOCR100	EOCR300	RF100	RF300	LOAD LIMITER	C20-01
	2TON AC 3PH 380V 60Hz	3.7KW x 4P	0.75KW x 4P	DC 100V	DBE-33AF/15AT	380/110,120V/60VA	1A	3A	DOC-22P	DOC-22P	AC 600V 75A	SS-30	SS-05	SR-30	SR-30	JDL-100	VFCT 4.0sqx4c
	2TON AC 3PH 380V 60Hz	1.8KW x 6P	0.5KW x 6P	DC 100V	DBE-33AF/15AT	380/110,120V/60VA	1A	2A	DOC-22P	DOC-22P	AC 600V 75A	SS-30	SS-05	SR-30	SR-30	JDL-100	VFCT 4.0sqx4c
SELECTION / MAKER	KUKDONG				DAERYUK	SHINHAN	-		DAERYUK		KUKDONG	ASECO				JUNGHO	DONGIL

MK	DATE	REVISIONS	CHK.	APP.
4				
3				
2				
1				

CUSTOMER		DRAWING	DESIGN	CHECKED	APPROVED	SCALE	DATE	ORDER NO.
DRAWING TITLE	HOISTING POWER & CONTROL CIRCUIT DIAGRAM					NONE		
		국동호이스트 주식회사 KUK DONG HOIST CO., LTD.				DWG. NO	KD02E34	

무단전재 및 배포금지

1	2	3	4	5	6	7	8	9	10	11	12	13	14	15	16	17	18	19	20

POWER CIRCUIT

TRAVERSING MOTION

ADR'S NO. C2

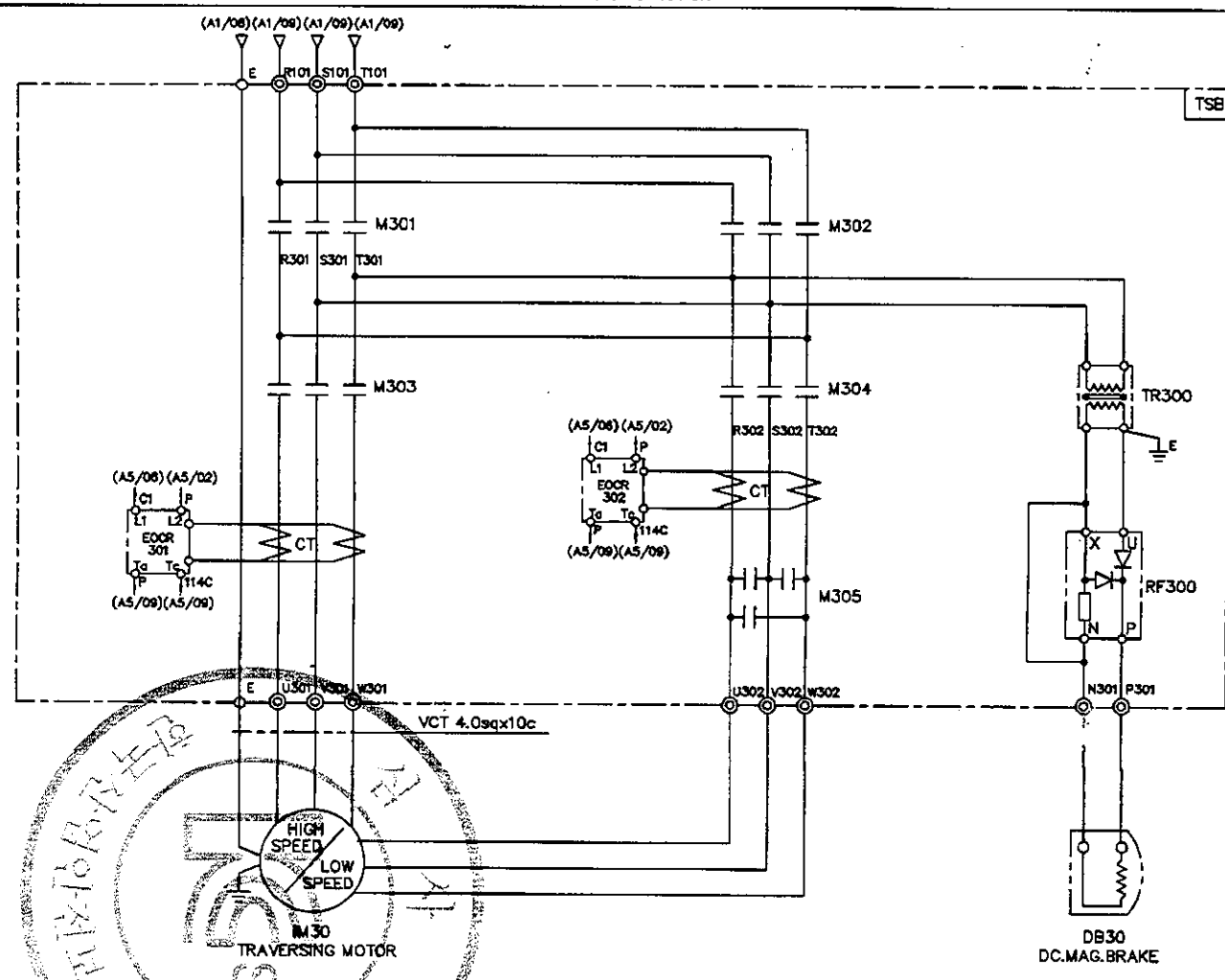

SPECIFICATION / SYMBOLS		TRAVERSING MOTOR	DC MAG' BRAKE	MAGNET CONTACTOR		SILICON RECTIFIER	ELECTRIC OVER CURRENT RELAY	TRANSFORMER
DESCRIPTION		IM-30	DB30	M301 , M302 , M303	M304 , M305	RF 300	EOCR 301,302	TR300
	380V	0.5/025KWx6/12P AC3PH 380V 60Hz	DC 100V	DOC-22P	DOC-22R	SR-30	SS-05	AC380/220V, 300VA
	380V	0.8/0.4KWx4/8P AC3PH 380V 60Hz	DC 100V	DOC-22P	DOC-22R	SR-30	SS-05	AC380/220V, 300VA
SELECTION / MAKER		KUKDONG		DAERYUK		ASECO		SHINHAN

MK	DATE	REVISIONS	CHK.	APP.
4				
3				
2				
1				

CUSTOMER		DRAWING	DESIGN	CHECKED	APPROVED	SCALE	DATE	ORDER NO.
DRAWING TITLE	TRAVERSING POWER CONTROL CIRCUIT DIAGRAM					NONE		
		KD 국동호이스트 주식회사 KUK DONG HOIST CO., LTD.				DWG. NO	KD02E35	

192.168.11.155 / 2011-06-17 15:51:43

1	2	3	4	5	6	7	8	9	10	11	12	13	14	15	16	17	18	19	20

POWER CIRCUIT

TRAVERSING MOTION

ADR'S NO. C2

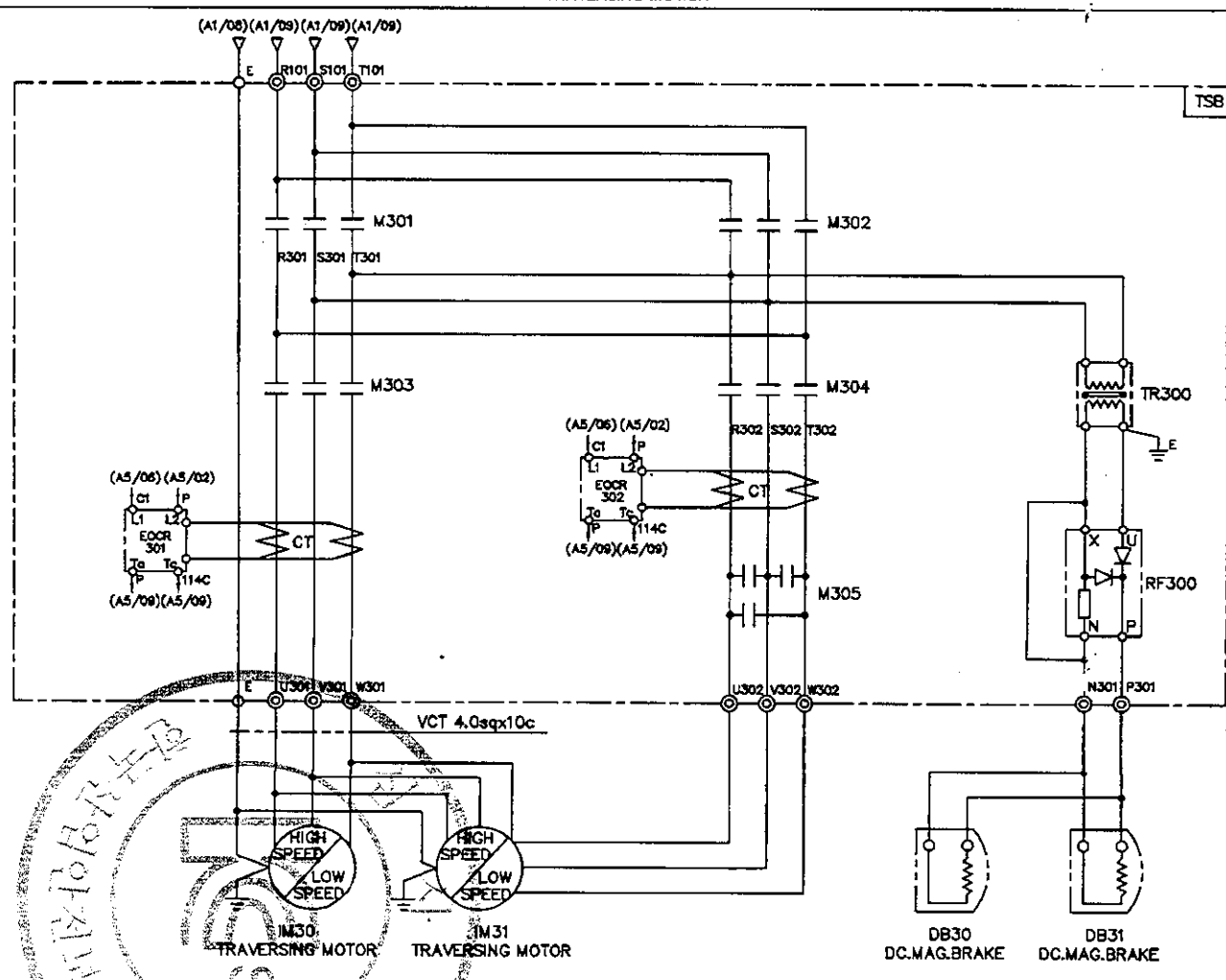

SPECIFICATION / SYMBOLS		TRAVERSING MOTOR	DC MAG' BRAKE	MAGNET CONTACTOR		SILICON RECTIFIER	ELECTRIC OVER CURRENT RELAY	TRANSFORMER
DESCRIPTION		IM 30 , 1M31	DB30 , DB31	M301 , M302 , M303	M304 , M305	RF 300	EOCR 301,302	TR300
	380V	0.5/0.25KWx8/12P AC3PH 380V 60Hz	DC 100V	DOC-22P	DOC-22R	SR-30	SS-05	AC380/220V, 300VA
	380V	0.8/0.4KWx4/8P AC3PH 380V 60Hz	DC 100V	DOC-22P	DOC-22R	SR-30	SS-05	AC380/220V, 300VA
SELECTION / MAKER		KUKDONG		DAERYUK		ASECO		SHINHAN

MK	DATE	REVISIONS	CHK.	APP.
4				
3				
2				
1				

CUSTOMER		DRAWING	DESIGN	CHECKED	APPROVED	SCALE	DATE	ORDER NO.
DRAWING TITLE	TRAVERSING POWER CONTROL CIRCUIT DIAGRAM					NONE		
		국동호이스트 주식회사 KUK DONG HOIST CO., LTD.				DWG. NO	KD02E36	

192.168.11.155 / 2011-06-17 15:51:43

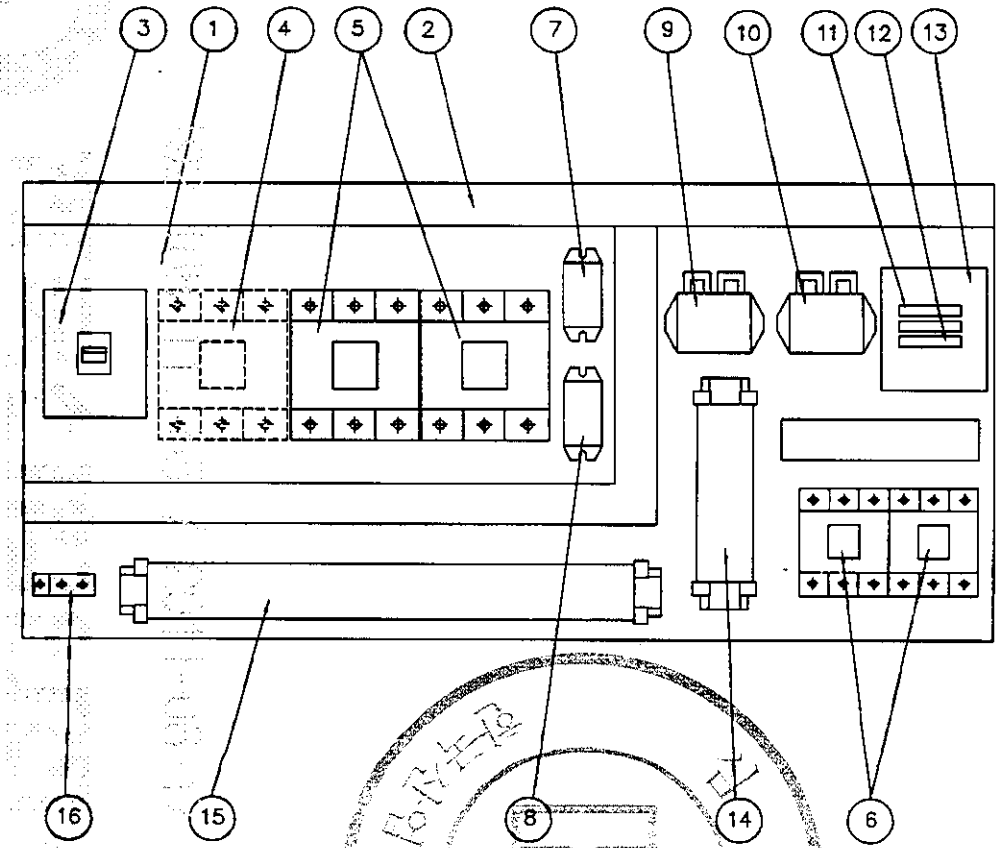

NO	DESCRIPTION	SPECIFICATION	Q'TY	REMARK
1	CHASSIS PLATE		1	아 연 도 금
2	CABLE DUCT	-	1	
3	N.F.B	33AF/15AT	1	HOISTING
4	MAGNET CONTACTOR	DOC-22P	1	MAIN MAG.
5	MAGNET CONTACTOR	DOC-22P	2	HOISTING
6	MAGNET CONTACTOR	DOC-22P	2	TRAVERSING
7	SILICON RECTIFIER	SR-30	1	HOISTING
8	SILICON RECTIFIER	SR-30	1	TRAVERSING
9	E.O.C.R	SS-30	1	HOISTING
10	E.O.C.R	SS-05	1	TRAVERSING
11	FUSE	1 A	2	
12	FUSE	3 A	1	
13	TRANSFORMER	440V/110,120V/60VA	1	
14	UPPER LIMIT	AC 600V/75A	1	
15	TERMINAL BLOCK	60A,15A		
16	EARTH TERMINAL	3tx20x50	1	

NOTE

1. UPPER LIMIT LS-1,LS-2의 접점 허용 전류 용량 : AC 600V, 75A
2. POWER SOURCE : AC. 3ϕ 440V 60HZ
3. EARTH TERMINAL RESISTANCE : 0.018Ω

NOTE

1. 전선의 색상은 다음과 같다.
   1) 흑색 : 교류 및 직류 전원선로
   2) 적색 : 교류제어회로
   3) 주황색 : 외부 전원에서 공급되는 연동장치 제어회로
   4) 녹색 또는 녹색과 황색 혼용 : 접지선
2. CABLE MATERIAL : KIV OR EQUIVALENT
   MIN SIZE : 2.5sq
3. 제어용 전선 : 2.5mm KIV,HIV
4. 제작시 다소 변경 될수있음.
5. 외함 개방구조는 다음과 같을것.
   1) 외함 개방시 충전부분이 차단되도록 할것.
   2) 외함 개방후 충전되어있는 부분은 IP2X 이상의 직접 접촉 방호가 되어있을것.

MK	DATE	REVISIONS	CHK.	APP.
4				
3				
2				
1				

CUSTOMER	
DRAWING TITLE	HOIST CONTROL BOX (고속)
	ARRANGEMENT DRAWING

DRAWING	DESIGN	CHECKED	APPROVED	SCALE	DATE	ORDER NO.
				NONE		

KD 극동호이스트 주식회사 KUK DONG HOIST CO., LTD.

DWG. NO KD02BA41

ADR'S NO.

192.168.11.155 / 2011-06-17 15:51:43

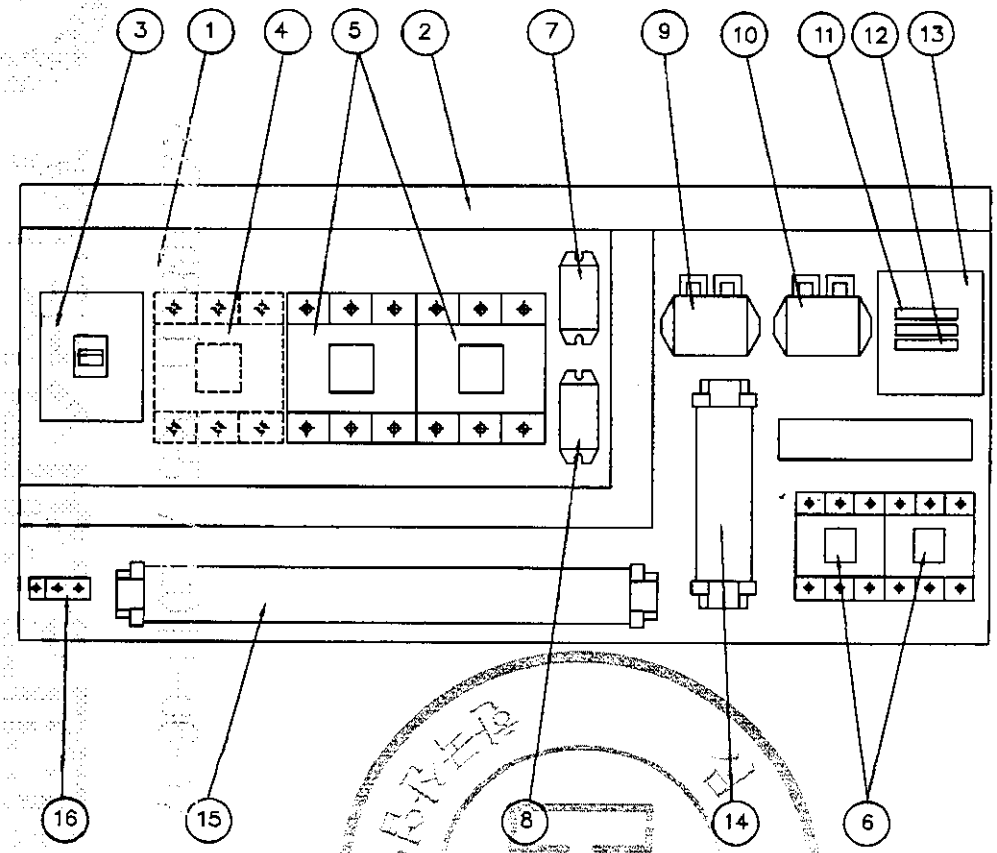

NOTE

1. UPPER LIMIT LS-1,LS-2의 접점 허용 전류 용량 : AC 600V, 75A
2. POWER SOURCE : AC. 3ø 440V 60HZ
3. EARTH TERMINAL RESISTANCE : 0.018Ω

NO	DESCRIPTION	SPECIFICATION	Q'TY	REMARK
1	CHASSIS PLATE		1	아 연 도 금
2	CABLE DUCT	–	1	
3	N.F.B	33AF/15AT	1	HOISTING
4	MAGNET CONTACTOR	DOC-22P	1	MAIN MAG.
5	MAGNET CONTACTOR	DOC-22P	2	HOISTING
6	MAGNET CONTACTOR	DOC-22P	2	TRAVERSING
7	SILICON RECTIFIER	SR-30	1	HOISTING
8	SILICON RECTIFIER	SR-30	1	TRAVERSING
9	E.O.C.R	SS-30	1	HOISTING
10	E.O.C.R	SS-05	1	TRAVERSING
11	FUSE	1 A	2	
12	FUSE	2 A	1	
13	TRANSFORMER	440V/110,120V/ 60VA	1	
14	UPPER LIMIT	AC 600V/75A	1	
15	TERMINAL BLOCK	60A,15A		
16	EARTH TERMINAL	3tx20x50	1	

NOTE

1. 전선의 색상은 다음과 같다.
   1) 흑색 : 교류 및 직류 전원선로
   2) 적색 : 교류제어회로
   3) 주황색 : 외부 전원에서 공급되는 연동장치 제어회로
   4) 녹색 또는 녹색과 황색 혼용 : 접지선
2. CABLE MATERIAL : KIV OR EQUIVALENT
   MIN SIZE : 2.5sq
3. 제어용 전선 : 2.5mm KIV,HIV
4. 제작시 다소 변경 될수있음.
5. 외함 개방구조는 다음과 같을것.
   1) 외함 개방시 충전부분이 차단되도록 할것.
   2) 외함 개방후 충전되어있는 부분은 IP2X 이상의 직접 접촉 방호가 되어있을것.

MK	DATE	REVISIONS	CHK.	APP.
4				
3				
2				
1				

CUSTOMER	
DRAWING TITLE	HOIST CONTROL BOX (저속)
	ARRANGEMENT DRAWING

DRAWING	DESIGN	CHECKED	APPROVED	SCALE	DATE	ORDER NO.
				NONE		

KD 극동호이스트 주식회사 KUK DONG HOIST CO., LTD.

DWG. NO KD02BA42

ADR'S NO.

192.168.11.155 / 2011-06-17 15:51:43

192.168.11.155 / 2011-06-17 15:51:43

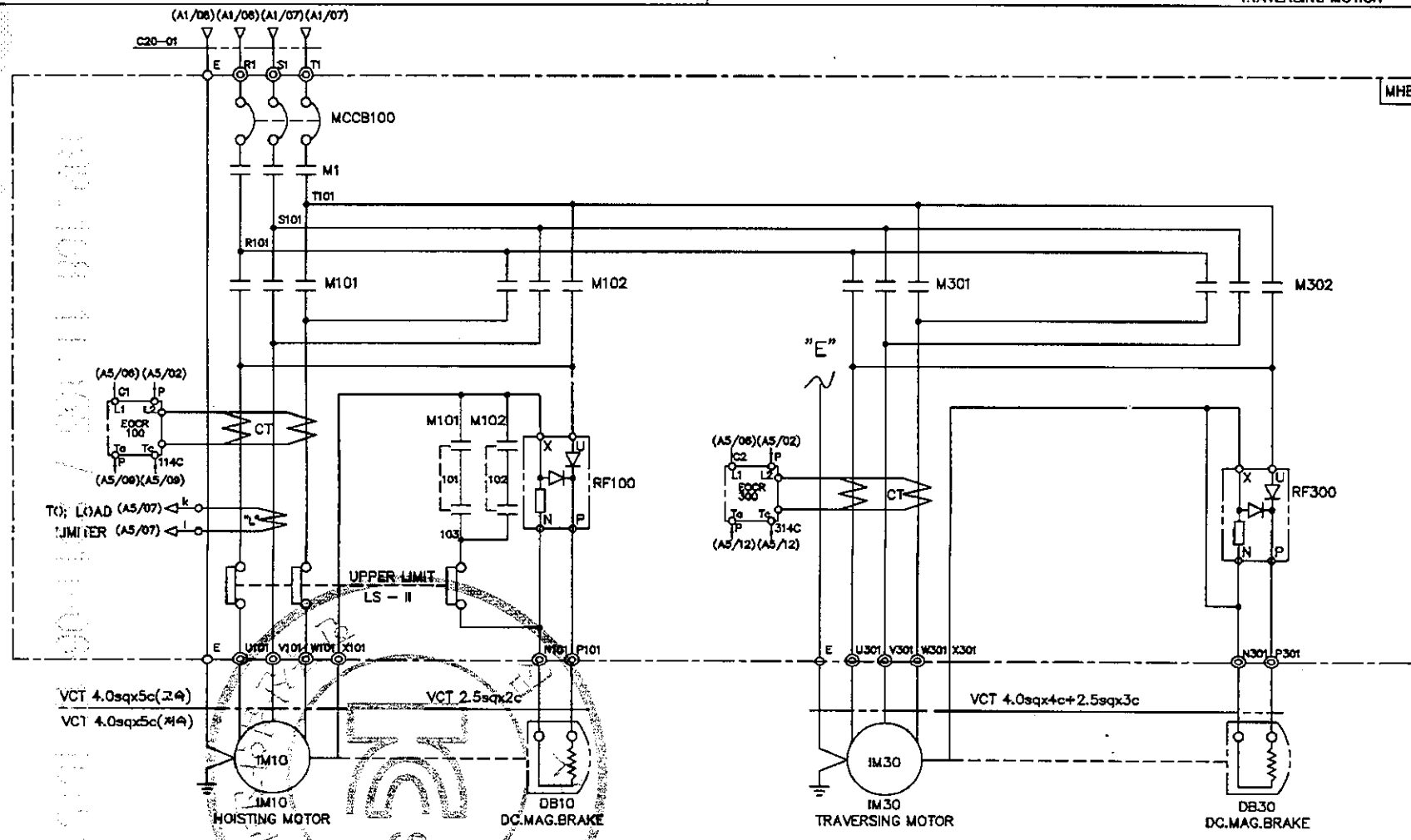

SPECIFICATION / SYMBOLS	HOISTING POWER	HOISTING MOTOR	TRAVERSING MOTOR	DC.MAG BRAKE	NO FUSE BREAKER	TRANSFORMER	FUSE		MAIN MAGNET	MAGNET CONTACTOR		UPPER LIMIT	ELECTRIC OVER CURRENT RELAY		SILICON RECTIFIER		LOAD LIMITER	CABLE
DESCRIPTION	HOIST	IM 10	IM 30	DB10, 30	MCCB100	TR 1	F11,F12	F13	M1	M101,M102	M301,M302	LS-I, LS-II	EOCR100	EOCR300	RF100	RF300	LOAD LIMITER	C20-01
	1.8TON AC 3PH 440V 60Hz	3.7KW x 4P	0.75KW x 4P	DC 100V	DBE-33AF/15AT	440/110,120V/60VA	1A	3A	DOC-22P	DOC-22P	DOC-22P	AC 600V 75A	SS-30	SS-05	SR-30	SR-30	JDL-100	VFCT 4.0sqx4c
	1.8TON AC 3PH 440V 60Hz	1.8KW x 8P	0.5KW x 8P	DC 100V	DBE-33AF/15AT	440/110,120V/60VA	1A	2A	DOC-22P	DOC-22P	DOC-22P	AC 600V 75A	SS-30	SS-05	SR-30	SR-30	JDL-100	VFCT 4.0sqx4c
SELECTION / MAKER	KUKDONG				DAERYUK	SHINHAN	-		DAERYUK			KUKDONG	ASECO				JUNGHO	DONGIL

MK	DATE	REVISIONS	CHK.	APP.
4				
3				
2				
1				

CUSTOMER		DRAWING	DESIGN	CHECKED	APPROVED	SCALE	DATE	ORDER NO.
DRAWING TITLE	HOISTING & T/S POWER CONTROL CIRCUIT DIAGRAM					NONE		
		구동호이스트 주식회사 KUK DONG HOIST CO., LTD.				DWG. NO	KD02E41	

1	2	3	4	5	6	7	8	9	10	11	12	13	14	15	16	17	18	19	20
POWER CIRCUIT																			ADR'S NO.
HOISTING MOTION										TRAVERSING MOTION									B1

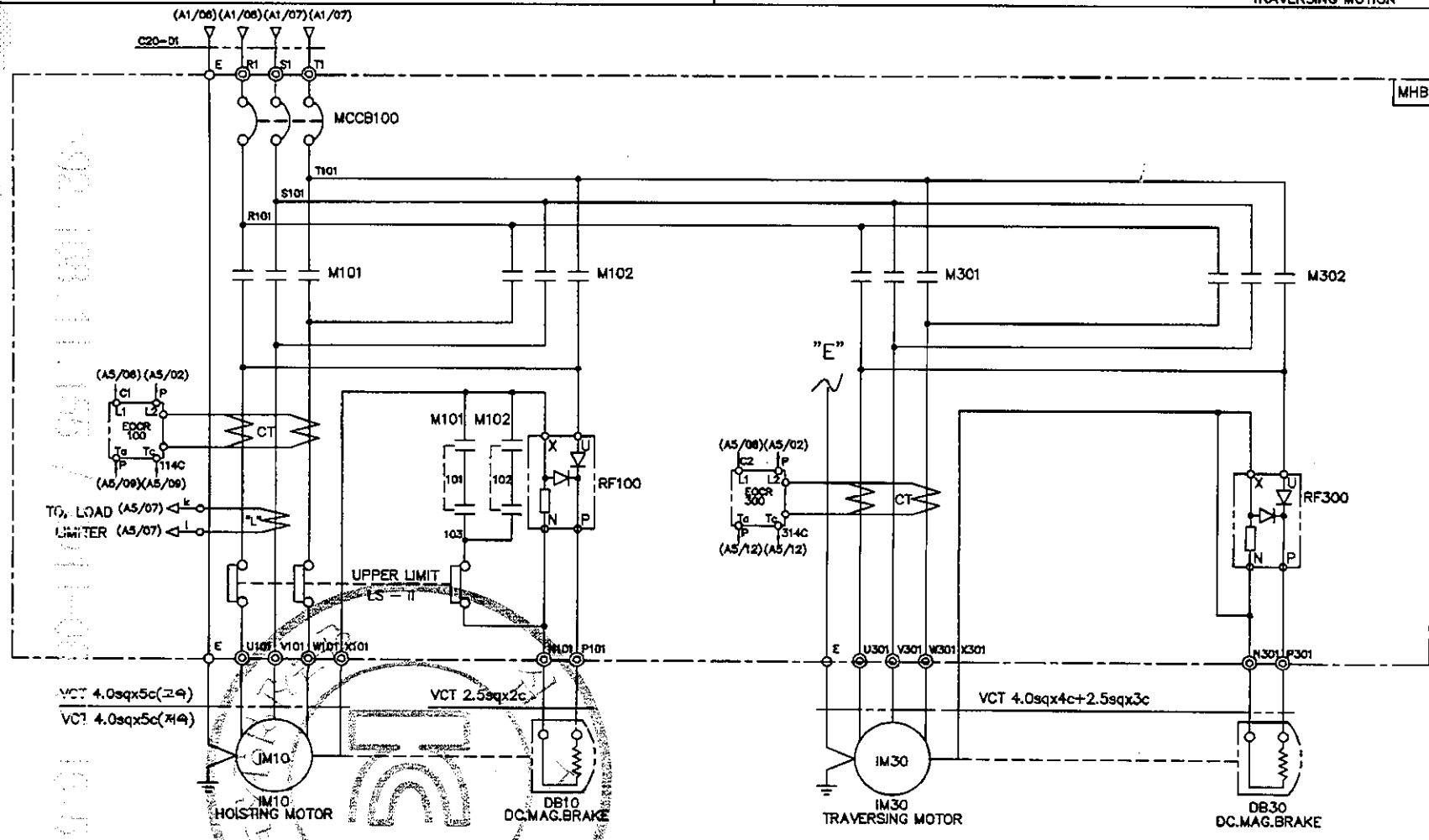

SPECIFICATION / SYMBOLS	HOISTING POWER	HOISTING MOTOR	TRAVERSING MOTOR	DC.MAG BRAKE	NO FUSE BREAKER	TRANSFORMER	FUSE		MAGNET CONTACTOR		UPPER LIMIT	ELECTRIC OVER CURRENT RELAY		SILICON RECTIFIER		LOAD LIMITER	CABLE
DESCRIPTION	HOIST	IM 10	IM 30	DB10, 30	MCCB100	TR 1	F11,F12	F13	M101,M102	M301,M302	LS-I, LS-II	EOCR100	EOCR300	RF100	RF300	LOAD LIMITER	C20-01
	1.8TON AC 3PH 440V 60Hz	3.7KW x 4P	0.75KW x 4P	DC 100V	DBE-33AF/15AT	440/110,120V/60VA	1A	3A	DOC-22P	DOC-22P	AC 600V 75A	SS-30	SS-05	SR-30	SR-30	JDL-100	VFCT 4.0sqx4c
	1.8TON AC 3PH 440V 60Hz	1.8KW x 8P	0.5KW x 8P	DC 100V	DBE-33AF/15AT	440/110,120V/60VA	1A	2A	DOC-22P	DOC-22P	AC 600V 75A	SS-30	SS-05	SR-30	SR-30	JDL-100	VFCT 4.0sqx4c
SELECTION / MAKER	KUKDONG				DAERYUK	SHINHAN	–		DAERYUK		KUKDONG	ASECO				JUNGHO	DONGIL

MK	DATE	REVISIONS	CHK.	APP.
4				
3				
2				
1				

CUSTOMER		DRAWING	DESIGN	CHECKED	APPROVED	SCALE	DATE	ORDER NO.
DRAWING TITLE	HOISTING & T/S POWER CONTROL CIRCUIT DIAGRAM					NONE		
		KD 극동호이스트 주식회사 KUK DONG HOIST CO., LTD.				DWG. NO	KD02E42	

192.168.11.155 / 2011-06-17 15:51:43

1	2	3	4	5	6	7	8	9	10	11	12	13	14	15	16	17	18	19	20

POWER CIRCUIT

ADR'S NO. B1

HOISTING MOTION | TRAVERSING MOTION

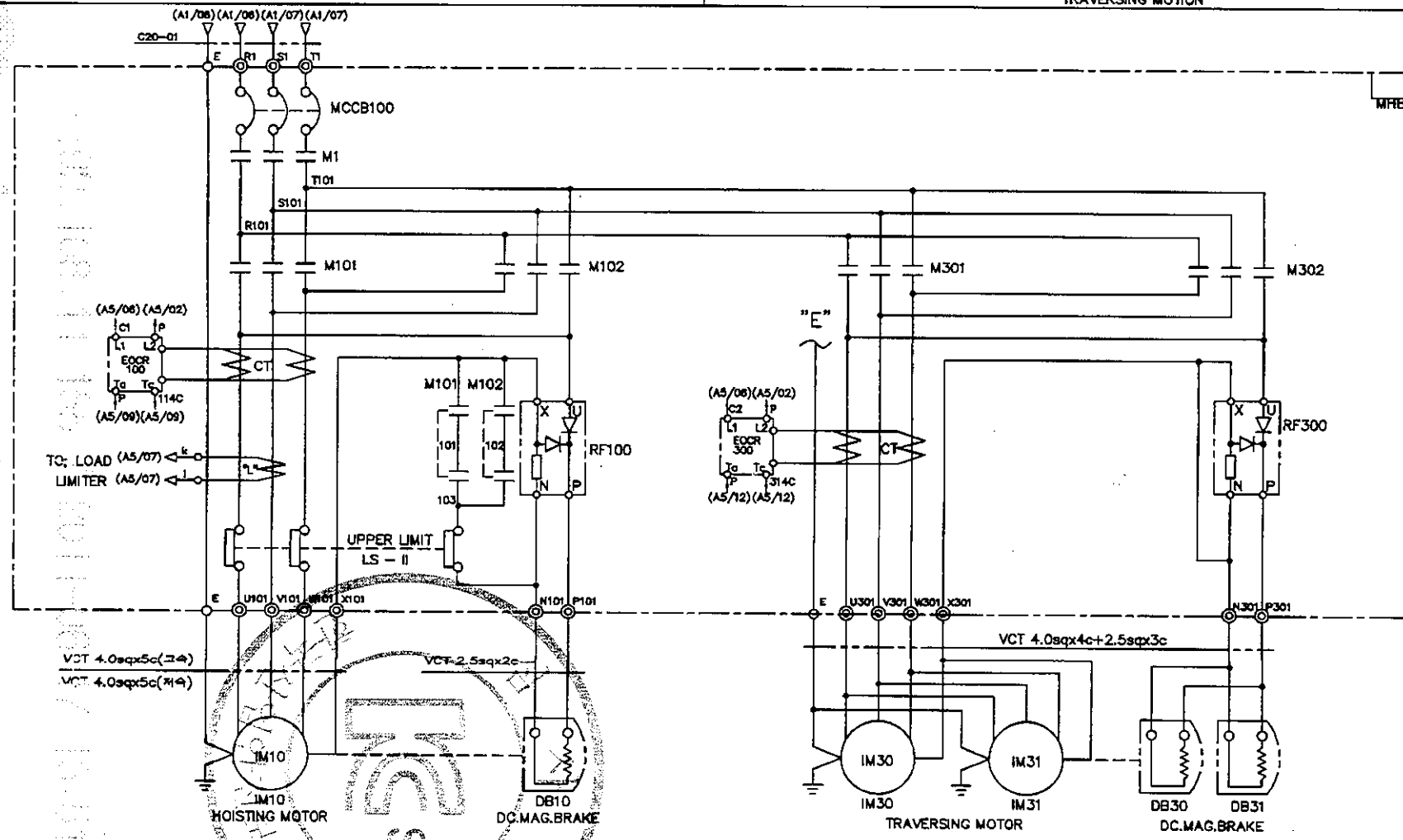

SPECIFICATION / SYMBOLS / DESCRIPTION	HOISTING POWER	HOISTING MOTOR	TRAVERSING MOTOR	DC.MAG. BRAKE	NO FUSE BREAKER	TRANSFORMER	FUSE		MAIN MAGNET	MAGNET CONTACTOR		UPPER LIMIT	ELECTRIC OVER CURRENT RELAY		SILICON RECTIFIER		LOAD LIMITER	CABLE
	HOIST	IM 10	IM 30,31	DB10, 30	MCCB100	TR 1	F11,F12	F13	M1	M101,M102	M301,M302	LS-I, LS-II	EOCR100	EOCR300	RF100	RF300	LOAD LIMITER	C20-01
	2TON AC 3PH 440V 60Hz	3.7KW x 4P	0.75KW x 4P	DC 100V	DBE-33AF/15AT	440/110,120V/60VA	1A	3A	DOC-22P	DOC-22P	DOC-22P	AC 600V 75A	SS-30	SS-05	SR-30	SR-30	JDL-100	VFCT 4.0sqx4c
	2TON AC 3PH 440V 60Hz	1.8KW x 8P	0.5KW x 6P	DC 100V	DBE-33AF/15AT	440/110,120V/60VA	1A	2A	DOC-22P	DOC-22P	DOC-22P	AC 600V 75A	SS-30	SS-05	SR-30	SR-30	JDL-100	VFCT 4.0sqx4c
SELECTION / MAKER	KUKDONG				DAERYUK	SHINHAN	-		DAERYUK			KUKDONG	ASECO				JUNGHO	DONGIL

MK	DATE	REVISIONS	CHK.	APP.
4				
3				
2				
1				

CUSTOMER		DRAWING	DESIGN	CHECKED	APPROVED	SCALE	DATE	ORDER NO.
DRAWING TITLE	HOISTING POWER & CONTROL CIRCUIT DIAGRAM					NONE		
		국동호이스트 주식회사 KUK DONG HOIST CO., LTD.				DWG. NO	KD02E43	

192.168.11.155 / 2011-06-17 15:51:43

1	2	3	4	5	6	7	8	9	10	11	12	13	14	15	16	17	1	19	20
POWER CIRCUIT																			ADR'S NO.
HOISTING MOTION										TRAVERSING MOTION									B1

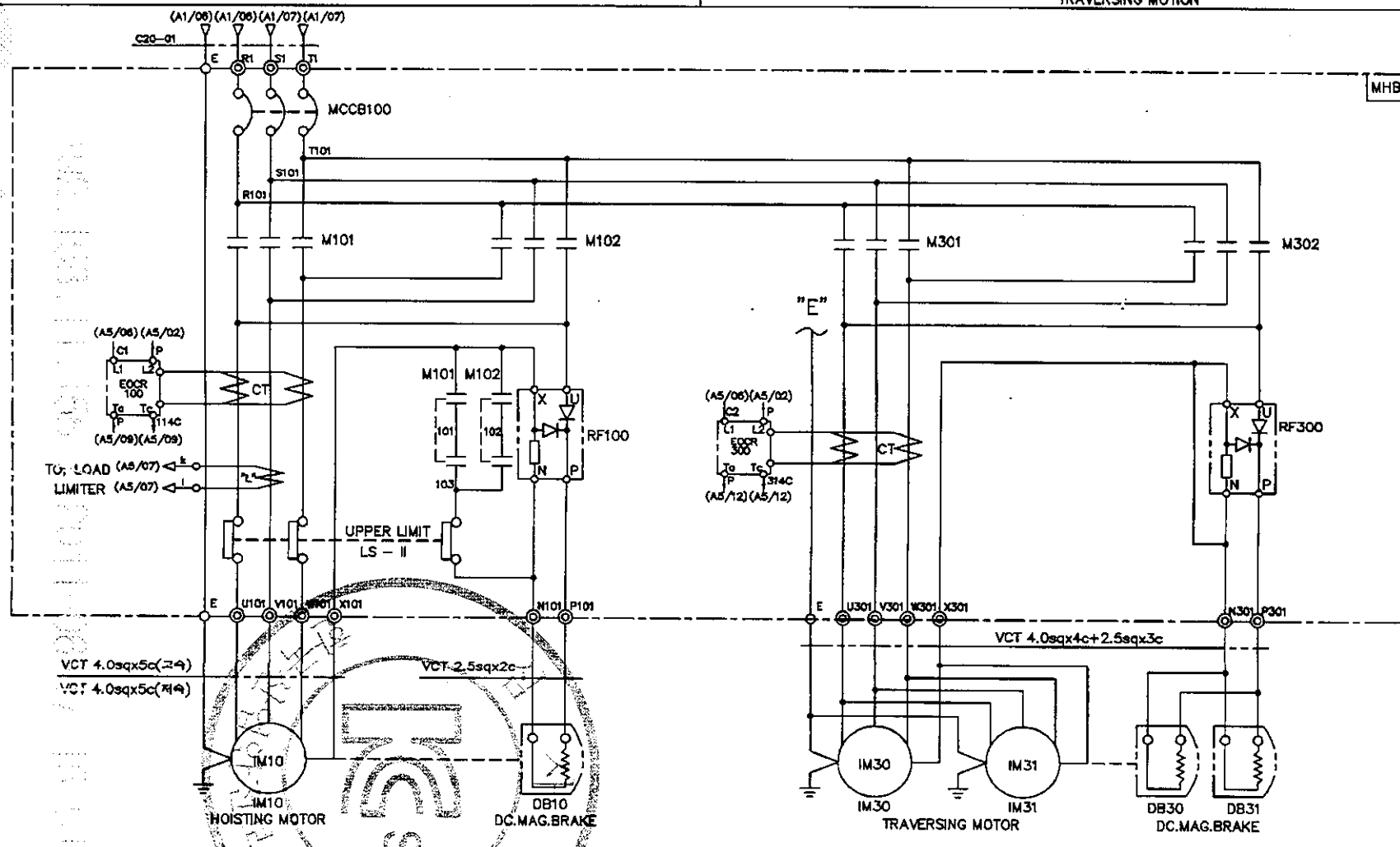

SPECIFICATION / SYMBOLS / DESCRIPTION	HOISTING POWER	HOISTING MOTOR	TRAVERSING MOTOR	DC.MAG BRAKE	NO FUSE BREAKER	TRANSFORMER	FUSE		MAGNET CONTACTOR		UPPER LIMIT	ELECTRIC OVER CURRENT RELAY		SILICON RECTIFIER		LOAD LIMITER	CABLE
	HOIST	IM 10	IM 30,31	DB10, 30	MCCB100	TR 1	F11,F12	F13	M101,M102	M301,M302	LS-I, LS-II	EOCR100	EOCR300	RF100	RF300	LOAD LIMITER	C20-01
	2TON AC 3PH 440V 60Hz	3.7KW x 4P	0.75KW x 4P	DC 100V	DBE-33AF/15AT	440/110,120V/60VA	1A	3A	DOC-22P	DOC-22P	AC 600V 75A	SS-30	SS-05	SR-30	SR-30	JDL-100	VFCT 4.0sqx4c
	2TON AC 3PH 440V 60Hz	1.8KW x 8P	0.5KW x 6P	DC 100V	DBE-33AF/15AT	440/110,120V/60VA	1A	2A	DOC-22P	DOC-22P	AC 600V 75A	SS-30	SS-05	SR-30	SR-30	JDL-100	VFCT 4.0sqx4c
SELECTION / MAKER	KUKDONG				DAERYUK	SHINHAN	-		DAERYUK		KUKDONG	ASECO				JUNGHO	DONGIL

MK	DATE	REVISIONS	CHK.	APP.
4				
3				
2				
1				

CUSTOMER		DRAWING	DESIGN	CHECKED	APPROVED	SCALE	DATE	ORDER NO.
DRAWING TITLE	HOISTING POWER & CONTROL CIRCUIT DIAGRAM					NONE		
		KD 극동호이스트 주식회사 KUK DONG HOIST CO., LTD.				DWG. NO	KD02E44	

192.168.11.155 / 2011-06-17 15:51:43

1	2	3	4	5	6	7	8	9	10	11	12	13	14	15	16	17	18	19	20

POWER CIRCUIT

TRAVERSING MOTION

ADR'S NO. C2

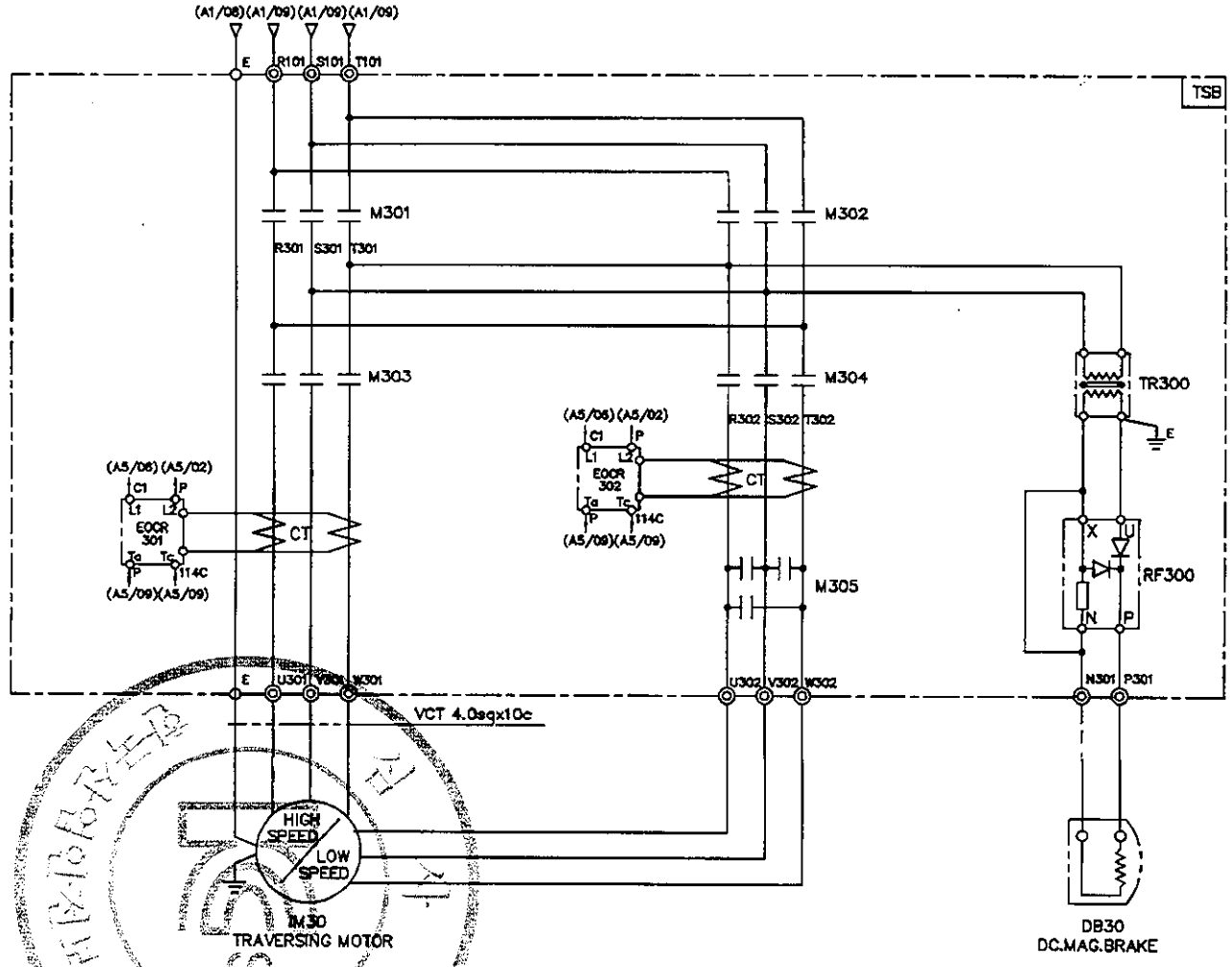

SPECIFICATION / SYMBOLS		TRAVERSING MOTOR	DC MAG' BRAKE	MAGNET CONTACTOR		SILICON RECTIFIER	ELECTRIC OVER CURRENT RELAY	TRANSFORMER
DESCRIPTION		IM30	DB30	M301 , M302 , M303	M304 , M305	RF 300	EOCR 301,302	TR300
	440V	0.5/025KWx6/12P AC3PH 440V 60Hz	DC 100V	DOC-22P	DOC-22R	SR-30	SS-05	AC440/220V, 300VA
	440V	0.8/0.4KWx4/8P AC3PH 440V 60Hz	DC 100V	DOC-22P	DOC-22R	SR-30	SS-05	AC440/220V, 300VA
SELECTION MAKER		KUKDONG		DAERYUK		ASECO		SHINHAN

MK	DATE	REVISIONS	CHK.	APP.
4				
3				
2				
1				

CUSTOMER		DRAWING	DESIGN	CHECKED	APPROVED	SCALE	DATE	ORDER NO.
DRAWING TITLE	TRAVERSING POWER CONTROL CIRCUIT DIAGRAM					NONE		
		KD 국동호이스트 주식회사 KUK DONG HOIST CO., LTD.				DWG. NO	KD02E45	

192.168.11.155 / 2011-06-17 15:51:43

1	2	3	4	5	6	7	8	9	10	11	12	13	14	15	16	17	18	19	20
POWER CIRCUIT																			ADR'S NO.
TRAVERSING MOTION																			C2

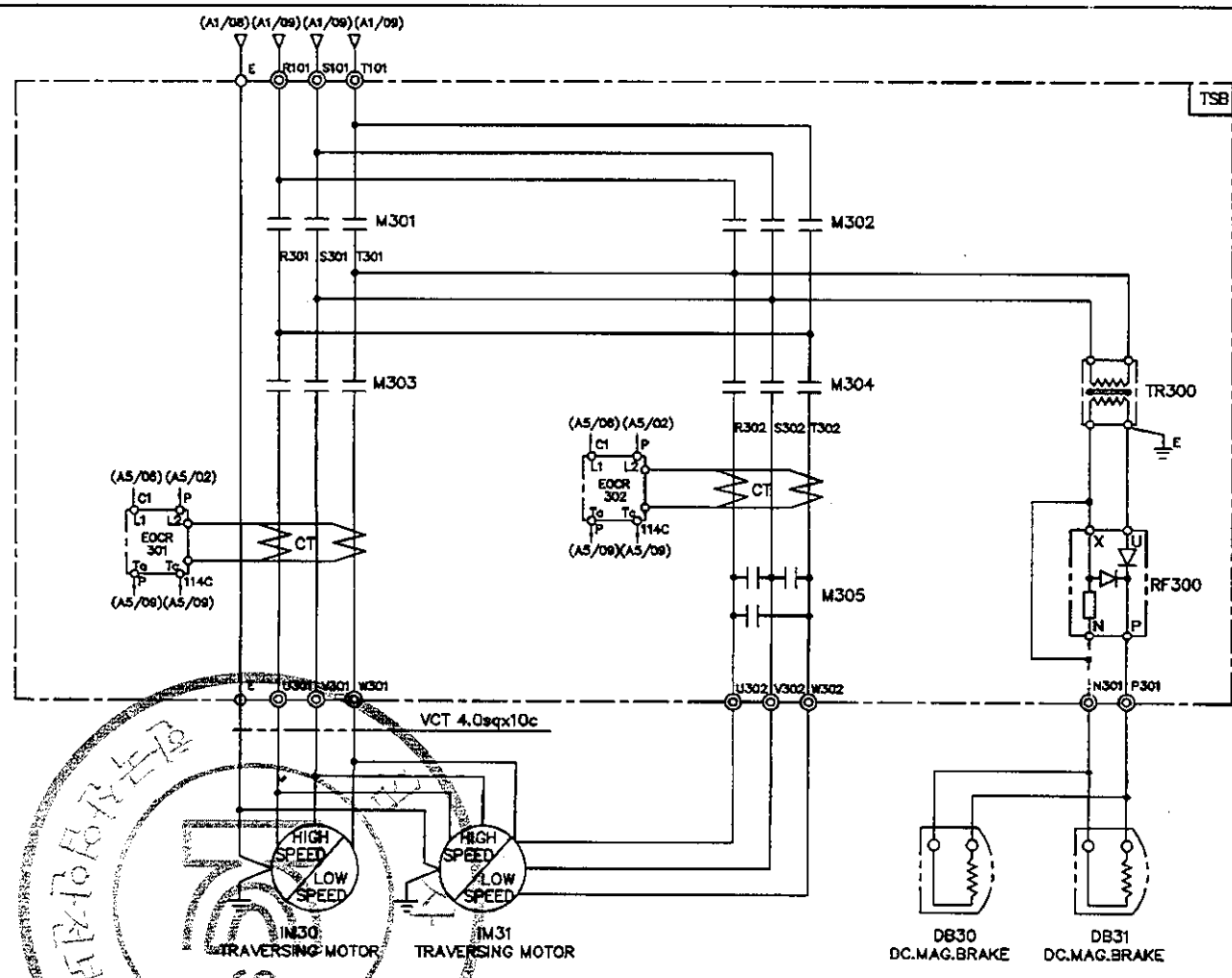

SPECIFICATION / SYMBOLS / DESCRIPTION		TRAVERSING MOTOR	DC MAG' BRAKE	MAGNET CONTACTOR		SILICON RECTIFIER	ELECTRIC OVER CURRENT RELAY	TRANSFORMER
		IM 30, 1M31	DB30 , DB31	M301 , M302 , M303	M304 , M305	RF 300	EOCR 301,302	TR300
	440V	0.5/0.25KWx6/12P AC3PH 440V 60Hz	DC 100V	DOC-22P	DOC-22R	SR-30	SS-05	AC440/220V, 300VA
	440V	0.8/0.4KWx4/8P AC3PH 440V 60Hz	DC 100V	DOC-22P	DOC-22R	SR-30	SS-05	AC440/220V, 300VA
SELECTION / MAKER		KUKDONG		DAERYUK		ASECO		SHINHAN

MK	DATE	REVISIONS	CHK.	APP.
4				
3				
2				
1				

CUSTOMER		DRAWING	DESIGN	CHECKED	APPROVED	SCALE	DATE	ORDER NO.
DRAWING TITLE	TRAVERSING POWER CONTROL CIRCUIT DIAGRAM					NONE		
		KD 극동호이스트 주식회사 KUK DONG HOIST CO., LTD.				DWG. NO	KD02E46	

192.168.11.155 / 2011-06-17 15:51:43

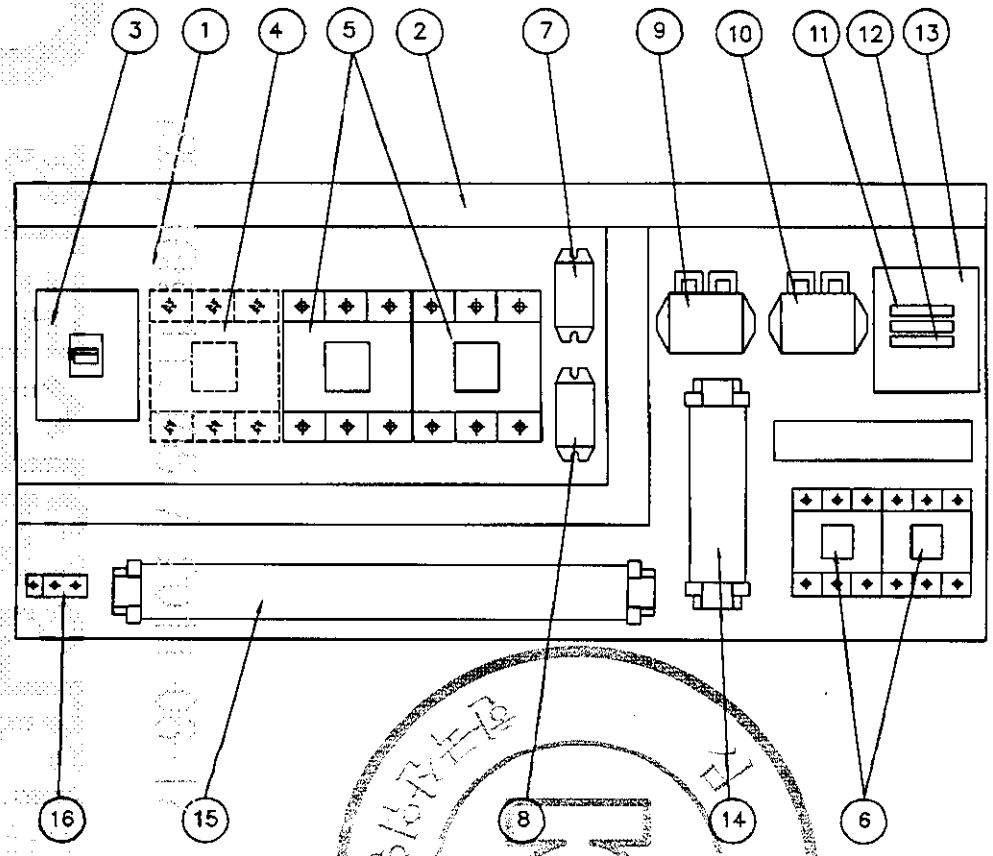

NOTE

1. UPPER LIMIT LS-1,LS-2의 접점 허용 전류, 용량 : AC 600V, 75A
2. POWER SOURCE : AC. 3ø 460V 60HZ
3. EARTH TERMINAL RESISTANCE : 0.018Ω

NO	DESCRIPTION	SPECIFICATION	Q'TY	REMARK
1	CHASSIS PLATE		1	아 연 도 금
2	CABLE DUCT	–	1	
3	N.F.B	33AF/15AT	1	HOISTING
4	MAGNET CONTACTOR	DOC-22P	1	MAIN MAG.
5	MAGNET CONTACTOR	DOC-22P	2	HOISTING
6	MAGNET CONTACTOR	DOC-22P	2	TRAVERSING
7	SILICON RECTIFIER	SR-30	1	HOISTING
8	SILICON RECTIFIER	SR-30	1	TRAVERSING
9	E.O.C.R	SS-30	1	HOISTING
10	E.O.C.R	SS-05	1	TRAVERSING
11	FUSE	1 A	2	
12	FUSE	3 A	1	
13	TRANSFORMER	460V/110,120V/60VA	1	
14	UPPER LIMIT	AC 600V/75A	1	
15	TERMINAL BLOCK	60A,15A		
16	EARTH TERMINAL	3tx20x50	1	

NOTE

1. 전선의 색상은 다음과 같다.
   1) 흑색 : 교류 및 직류 전원선로
   2) 적색 : 교류제어회로
   3) 주황색 : 외부 전원에서 공급되는 연동장치 제어회로
   4) 녹색 또는 녹색과 황색 혼용 : 접지선
2. CABLE MATERIAL : KIV OR EQUIVALENT
   MIN SIZE : 2.5sq
3. 제어용 전선 : 2.5mm KIV,HIV
4. 제작시 다소 변경 될수있음.
5. 외함 개방구조는 다음과 같을것.
   1) 외함 개방시 충전부분이 차단되도록 할것.
   2) 외함 개방후 충전되어있는 부분은 IP2X 이상의 직접 접촉 방호가 되어있을것.

MK	DATE	REVISIONS	CHK.	APP.
4				
3				
2				
1				

CUSTOMER	
DRAWING TITLE	HOIST CONTROL BOX (고속)
	ARRANGEMENT DRAWING

DRAWING	DESIGN	CHECKED	APPROVED	SCALE	DATE	ORDER NO.
				NONE		

KD 극동호이스트 주식회사 KUK DONG HOIST CO., LTD.

DWG. NO KD02BA51

ADR'S NO.

본법복제 및 배포금지

192.168.11.155 / 2011-06-17 15:51:43

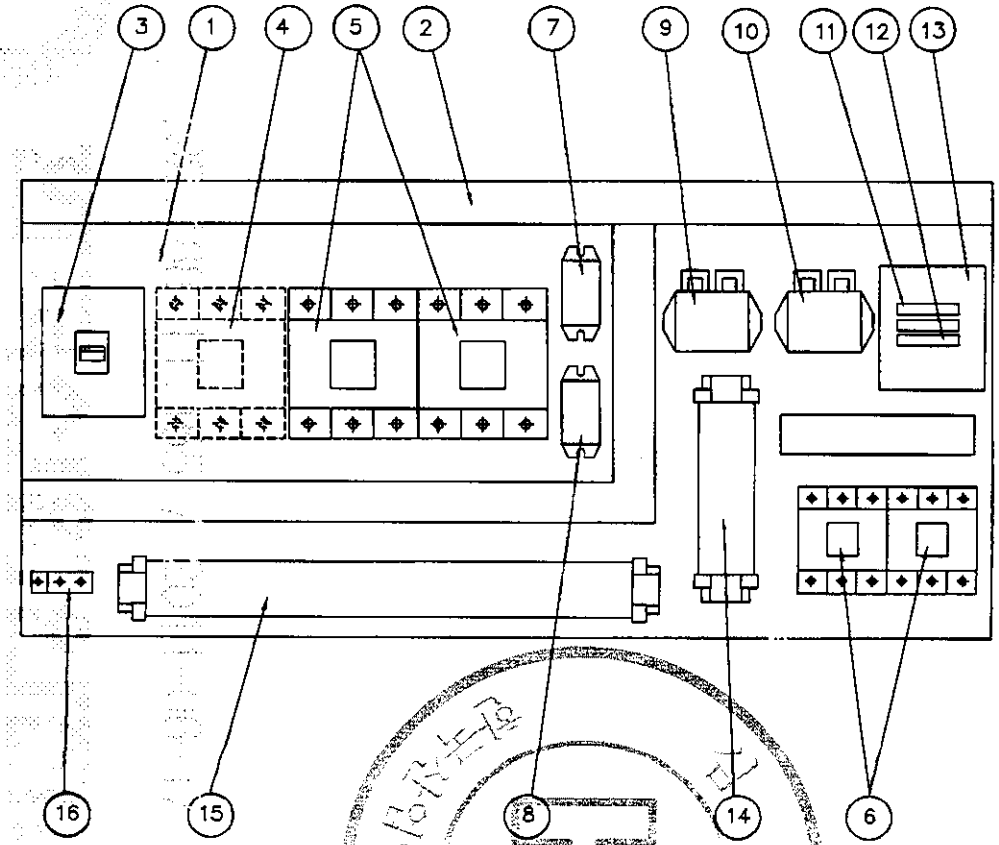

NO	DESCRIPTION	SPECIFICATION	Q'TY	REMARK
1	CHASSIS PLATE		1	아 연 도 금
2	CABLE DUCT	–	1	
3	N.F.B	33AF/15AT	1	HOISTING
4	MAGNET CONTACTOR	DOC–22P	1	MAIN MAG.
5	MAGNET CONTACTOR	DOC–22P	2	HOISTING
6	MAGNET CONTACTOR	DOC–22P	2	TRAVERSING
7	SILICON RECTIFIER	SR–30	1	HOISTING
8	SILICON RECTIFIER	SR–30	1	TRAVERSING
9	E.O.C.R	SS–30	1	HOISTING
10	E.O.C.R	SS–05	1	TRAVERSING
11	FUSE	1 A	2	
12	FUSE	2 A	1	
13	TRANSFORMER	460V/110,120V/ 60VA	1	
14	UPPER LIMIT	AC 600V/75A	1	
15	TERMINAL BLOCK	60A,15A		
16	EARTH TERMINAL	3t×20×50	1	

NOTE
1. UPPER LIMIT LS–1,LS–2의 접점 허용 전류 용량 : AC 600V, 75A
2. POWER SOURCE : AC. 3ø 460V 60HZ
3. EARTH TERMINAL RESISTANCE : 0.018Ω

NOTE
1. 전선의 색상은 다음과 같다.
   1) 흑색 : 고류 및 직류 전원선로
   2) 적색 : 고류제어회로
   3) 주황색 : 외부 전원에서 공급되는 연동장치 제어회로
   4) 녹색 또는 녹색과 황색 혼용 : 접지선
2. CABLE MATERIAL : KIV OR EQUIVALENT
   MIN SIZE : 2.5sq
3. 제어용 전선 : 2.5mm KIV,HIV
4. 제작시 다소 변경 될수있음.
5. 외함 개방구조는 다음과 같을것.
   1) 외함 개방시 충전부분이 차단되도록 할것.
   2) 외함 개방후 충전되어있는 부분은 IP2X 이상의 직접 접촉 방호가 되어있을것.

MK	DATE	REVISIONS	CHK.	APP.
4				
3				
2				
1				

CUSTOMER		DRAWING	DESIGN	CHECKED	APPROVED	SCALE	DATE	ORDER NO.
DRAWING TITLE	HOIST CONTROL BOX (처속)					NONE		
	ARRANGEMENT DRAWING	극동호이스트 주식회사 KUK DONG HOIST CO., LTD.				DWG. NO	KD02BA52	

192.168.11.155 / 2011-06-17 15:51:43

仪器表册 资料品质

1	2	3	4	5	6	7	8	9	10	11	12	13	14	15	16	17	18	19	20

POWER CIRCUIT

ADR'S NO. B1

HOISTING MOTION | TRAVERSING MOTION

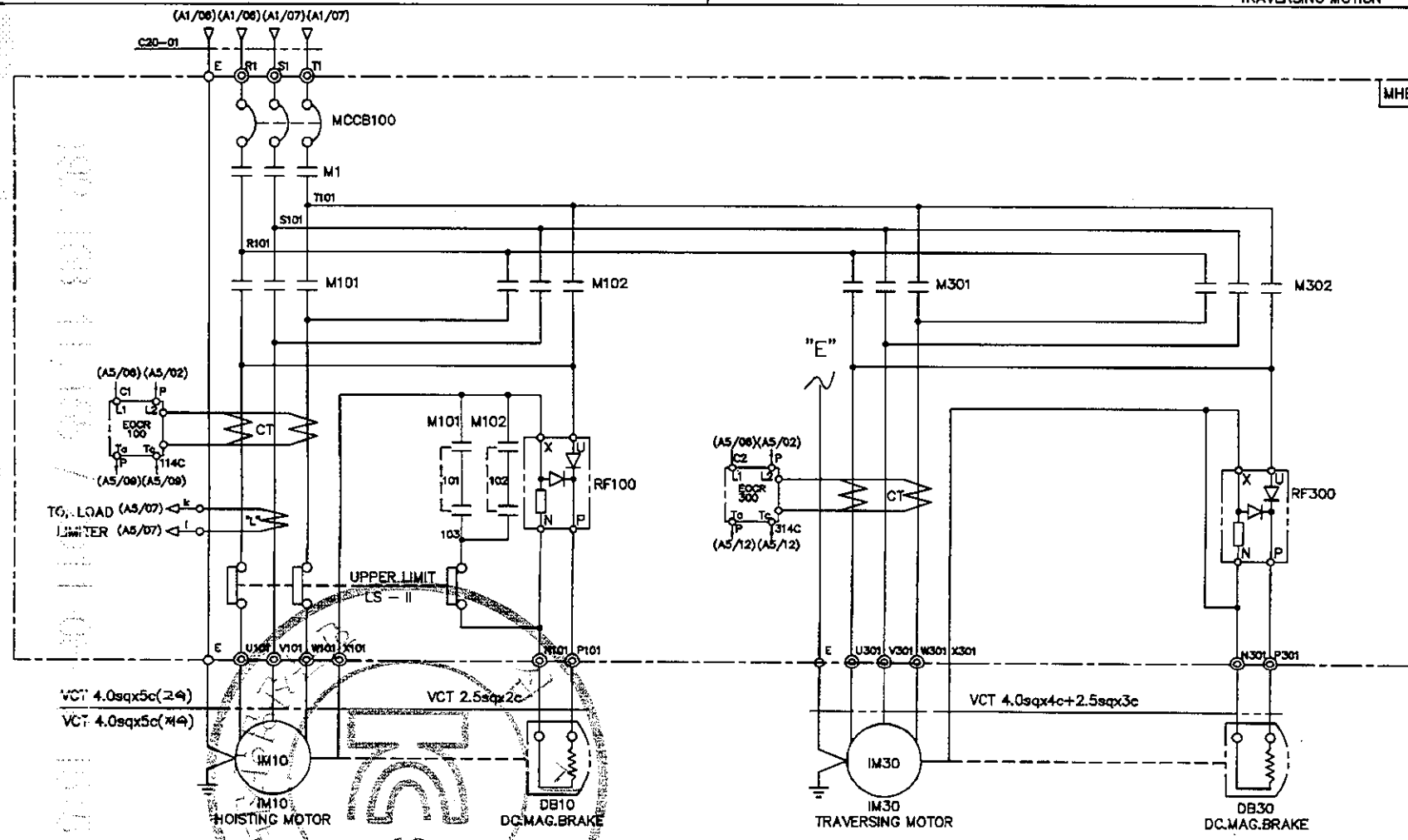

SPECIFICATION / SYMBOLS / DESCRIPTION	HOISTING POWER	HOISTING MOTOR	TRAVERSING MOTOR	DC.MAG. BRAKE	NO FUSE BREAKER	TRANSFORMER	FUSE		MAIN MAGNET	MAGNET CONTACTOR		UPPER LIMIT	ELECTRIC OVER CURRENT RELAY		SILICON RECTIFIER		LOAD LIMITER	CABLE
	HOIST	IM 30	IM 30	DB10, 30	MCCB100	TR 1	F11,F12	F13	M1	M101,M102	M301,M302	LS-I, LS-II	EOCR100	EOCR300	RF100	RF300	LOAD LIMITER	C20-01
	2TON AC 3PH 460V 60Hz	3.7KW x 4P	0.75KW x 4P	DC 100V	DBE-33AF/15AT	460/110,120V/60VA	1A	3A	DOC-22P	DOC-22P	DOC-22P	AC 600V 75A	SS-30	SS-05	SR-30	SR-30	JDL-100	VFCT 4.0sqx4c
	2TON AC 3PH 460V 60Hz	1.8KW x 8P	0.5KW x 8P	DC 100V	DBE-33AF/15AT	460/110,120V/60VA	1A	2A	DOC-22P	DOC-22P	DOC-22P	AC 600V 75A	SS-30	SS-05	SR-30	SR-30	JDL-100	VFCT 4.0sqx4c
SELECTION / MAKER	KUKDONG				DAERYUK	SHINHAN	–		DAERYUK			KUKDONG	ASECO				JUNGHO	DONGIL

MK	DATE	REVISIONS	CHK.	APP.
4				
3				
2				
1				

CUSTOMER

DRAWING TITLE: HOISTING & T/S POWER CONTROL CIRCUIT DIAGRAM

DRAWING	DESIGN	CHECKED	APPROVED	SCALE	DATE	ORDER NO.
				NONE		

국동호이스트 주식회사 KUK DONG HOIST CO., LTD.

DWG. NO KD02E51

192.168.11.155 / 2011-06-17 15:51:43

192.168.11.155 / 2011-06-17 15:51:43

비상용 및 참조용

1	2	3	4	5	6	7	8	9	10	11	12	13	14	15	16	17	18	19	20

POWER CIRCUIT — ADR'S NO. B1

HOISTING MOTION | TRAVERSING MOTION

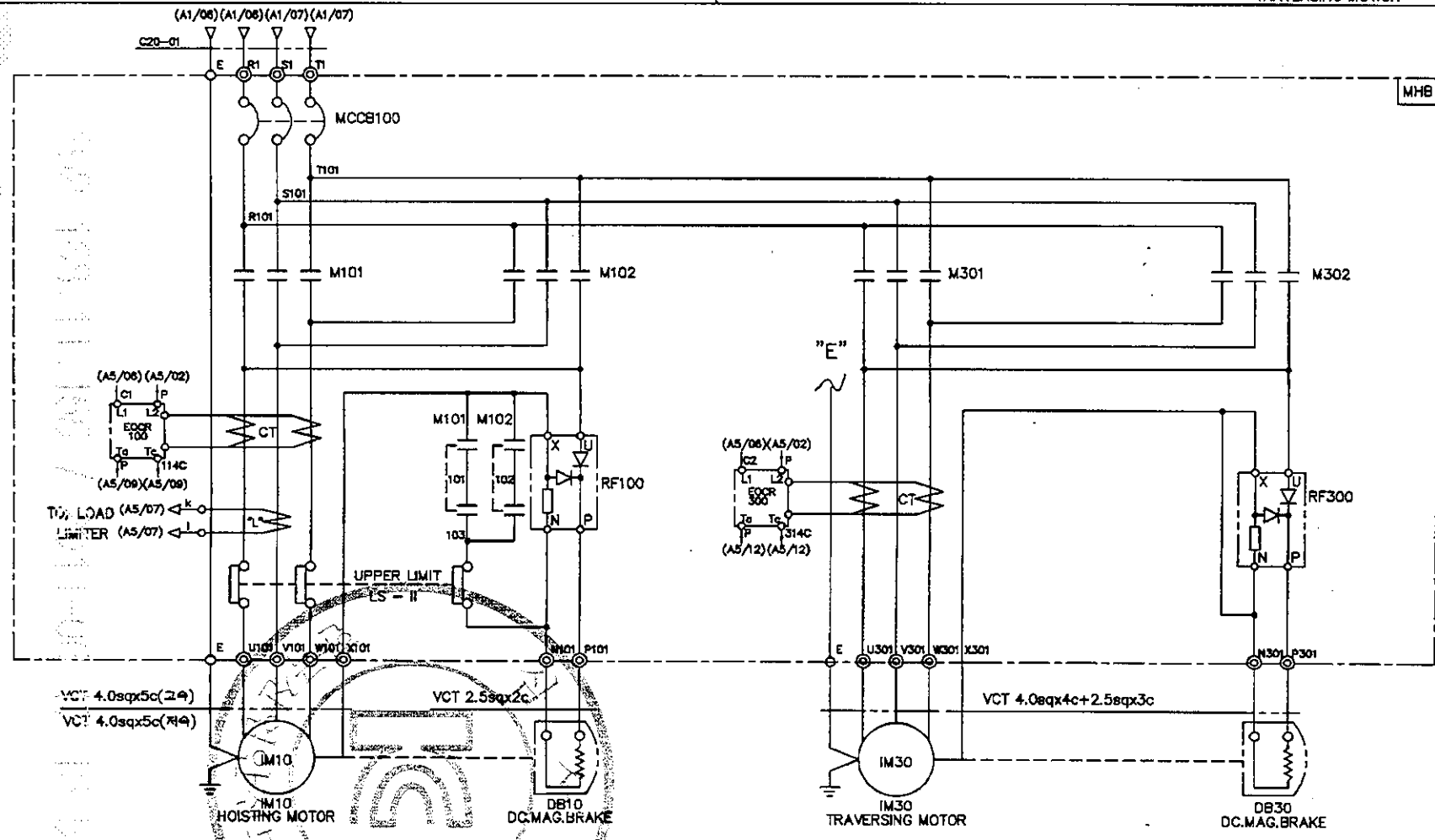

SPECIFICATION / SYMBOLS	HOISTING POWER	HOISTING MOTOR	TRAVERSING MOTOR	DC.MAG BRAKE	NO FUSE BREAKER	TRANSFORMER	FUSE		MAGNET CONTACTOR		UPPER LIMIT	ELECTRIC OVER CURRENT RELAY		SILICON RECTIFIER		LOAD LIMITER	CABLE
DESCRIPTION	HOIST	IM 10	IM 30	DB10, 30	MCCB100	TR 1	F11,F12	F13	M101,M102	M301,M302	LS-I, LS-II	EOCR100	EOCR300	RF100	RF300	LOAD LIMITER	C20-01
	2TON AC 3PH 460V 60Hz	3.7KW x 4P	0.75KW x 4P	DC 100V	DBE-33AF/15AT	460/110,120V/60VA	1A	3A	DOC-22P	DOC-22P	AC 600V 75A	SS-30	SS-05	SR-30	SR-30	JDL-100	VFCT 4.0sqx4c
	2TON AC 3PH 460V 60Hz	1.8KW x 8P	0.6KW x 6P	DC 100V	DBE-33AF/15AT	460/110,120V/60VA	1A	2A	DOC-22P	DOC-22P	AC 600V 75A	SS-30	SS-05	SR-30	SR-30	JDL-100	VFCT 4.0sqx4c
SELECTION / MAKER	KUKDONG				DAERYUK	SHINHAN	–		DAERYUK		KUKDONG	ASECO				JUNGHO	DONGIL

MK	DATE	REVISIONS	CHK.	APP.
4				
3				
2				
1				

CUSTOMER		DRAWING	DESIGN	CHECKED	APPROVED	SCALE	DATE	ORDER NO.
DRAWING TITLE	HOISTING & T/S POWER CONTROL CIRCUIT DIAGRAM					NONE		
		국동호이스트 주식회사 KUK DONG HOIST CO., LTD.				DWG. NO	KD02E52	

192.168.11.155 / 2011-06-17 15:51:43

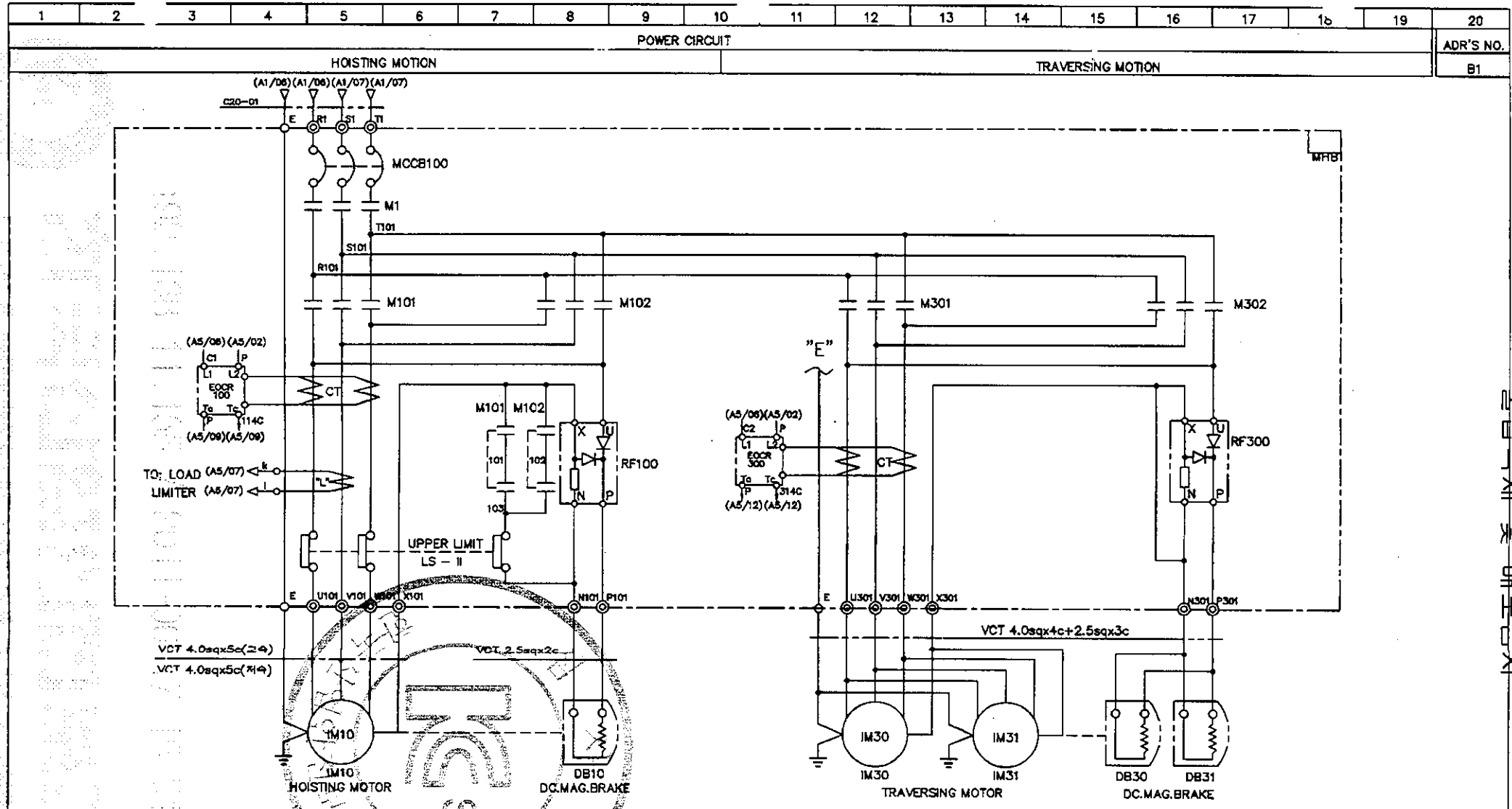

SPECIFICATION / SYMBOLS / DESCRIPTION	HOISTING POWER	HOISTING MOTOR	TRAVERSING MOTOR	DC.MAG. BRAKE	NO FUSE BREAKER	TRANSFORMER	FUSE		MAIN MAGNET	MAGNET CONTACTOR		UPPER LIMIT	ELECTRIC OVER CURRENT RELAY		SILICON RECTIFIER		LOAD LIMITER	CABLE
	HOIST	IM 10	IM 30,31	DB10, 30	MCCB100	TR 1	F11,F12	F13	M1	M101,M102	M301,M302	LS-I, LS-II	EOCR100	EOCR300	RF100	RF300	LOAD LIMITER	C20-01
	2TON AC 3PH 460V 60Hz	3.7KW x 4P	0.75KW x 4P	DC 100V	DBE-33AF/15AT	480/110,120V/60VA	1A	3A	DOC-22P	DOC-22P	DOC-22P	AC 600V 75A	SS-30	SS-05	SR-30	SR-30	JDL-100	VFCT 4.0sqx4c
	2TON AC 3PH 460V 60Hz	1.8KW x 8P	0.5KW x 6P	DC 100V	DBE-33AF/15AT	480/110,120V/60VA	1A	2A	DOC-22P	DOC-22P	DOC-22P	AC 600V 75A	SS-30	SS-05	SR-30	SR-30	JDL-100	VFCT 4.0sqx4c
SELECTION MAKER	KUKDONG				DAERYUK	SHINHAN	-		DAERYUK			KUKDONG	ASECO				JUNGHO	DONGIL

MK	DATE	REVISIONS	CHK.	APP.
4				
3				
2				
1				

CUSTOMER		DRAWING	DESIGN	CHECKED	APPROVED	SCALE	DATE	ORDER NO.
DRAWING TITLE	HOISTING POWER & CONTROL CIRCUIT DIAGRAM					NONE		
		국동호이스트 주식회사 KUK DONG HOIST CO., LTD.				DWG. NO	KD02E53	

1	2	3	4	5	6	7	8	9	10	11	12	13	14	15	16	17	18	19	20
POWER CIRCUIT																			ADR'S NO.
HOISTING MOTION										TRAVERSING MOTION									B1

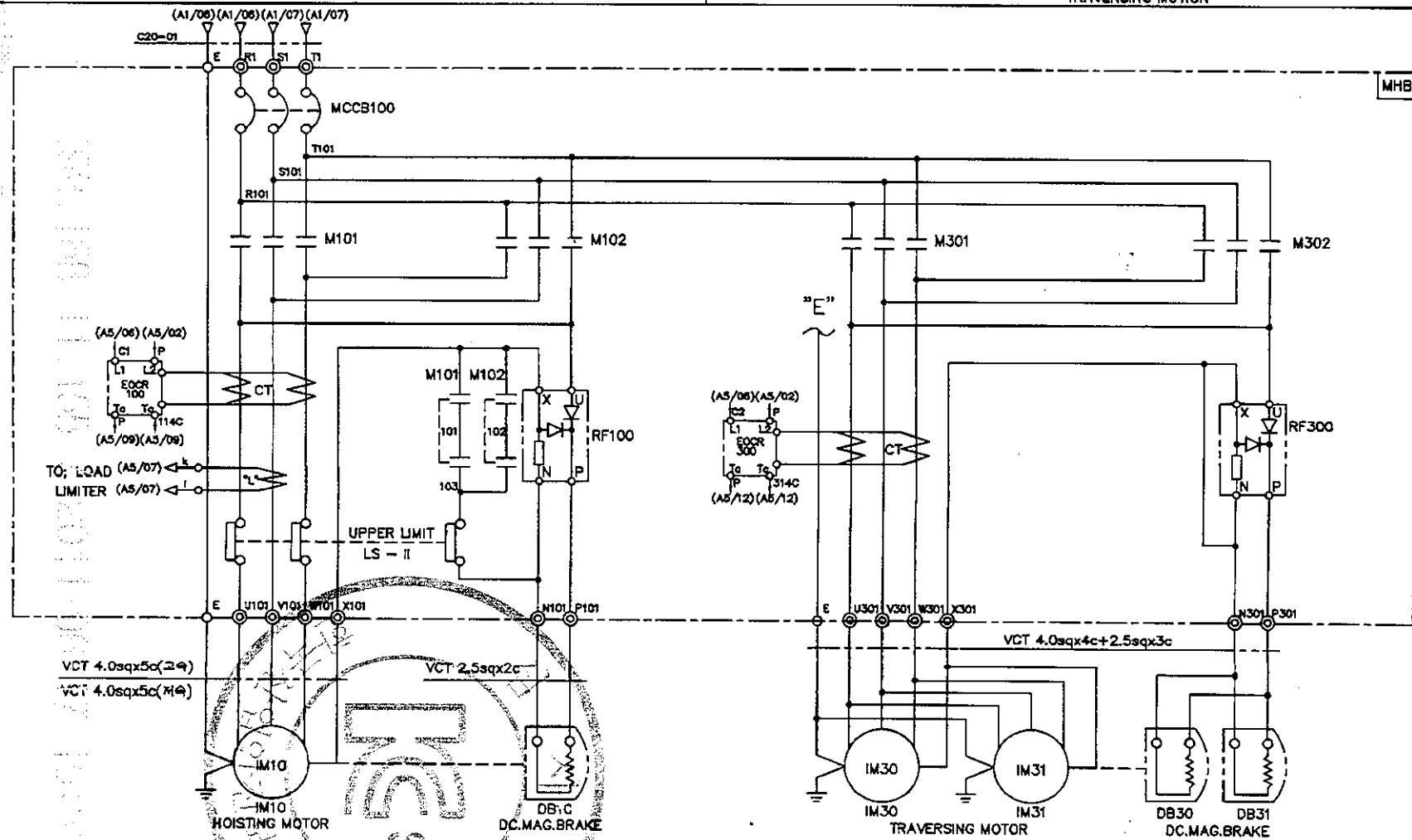

SPECIFICATION / SYMBOLS / DESCRIPTION	HOISTING POWER	HOISTING MOTOR	TRAVERSING MOTOR	DC.MAG BRAKE	NO FUSE BREAKER	TRANSFORMER	FUSE		MAGNET CONTACTOR		UPPER LIMIT	ELECTRIC OVER CURRENT RELAY		SILICON RECTIFIER		LOAD LIMITER	CABLE
	HOIST	IM 10	IM 30,31	DB10, 30	MCCB100	TR 1	F11,F12	F13	M101,M102	M301,M302	LS-I, LS-II	EOCR100	EOCR300	RF100	RF300	LOAD LIMITER	C20-01
	2TON AC 3PH 460V 60Hz	3.7KW x 4P	0.75KW x 4P	DC 100V	DBE-33AF/15AT	460/110,120V/60VA	1A	3A	DOC-22P	DOC-22P	AC 600V 75A	SS-30	SS-05	SR-30	SR-30	JDL-100	VFCT 4.0sqx4c
	2TON AC 3PH 460V 60Hz	1.8KW x 8P	0.5KW x 8P	DC 100V	DBE-33AF/15AT	460/110,120V/60VA	1A	2A	DOC-22P	DOC-22P	AC 600V 75A	SS-30	SS-05	SR-30	SR-30	JDL-100	VFCT 4.0sqx4c
SELECTION / MAKER	KUKDONG				DAERYUK	SHINHAN	-		DAERYUK		KUKDONG	ASECO				JUNGHO	DONGIL

MK	DATE	REVISIONS	CHK.	APP.
4				
3				
2				
1				

CUSTOMER		DRAWING	DESIGN	CHECKED	APPROVED	SCALE	DATE	ORDER NO.
DRAWING TITLE	HOISTING POWER & CONTROL CIRCUIT DIAGRAM					NONE		

KD 극동호이스트 주식회사 KUK DONG HOIST CO., LTD.

DWG. NO KD02E54

192.168.11.155 / 2011-06-17 15:51:43

1	2	3	4	5	6	7	8	9	10	11	12	13	14	15	16	17	18	19	20
POWER CIRCUIT																			ADR'S NO.
TRAVERSING MOTION																			C2

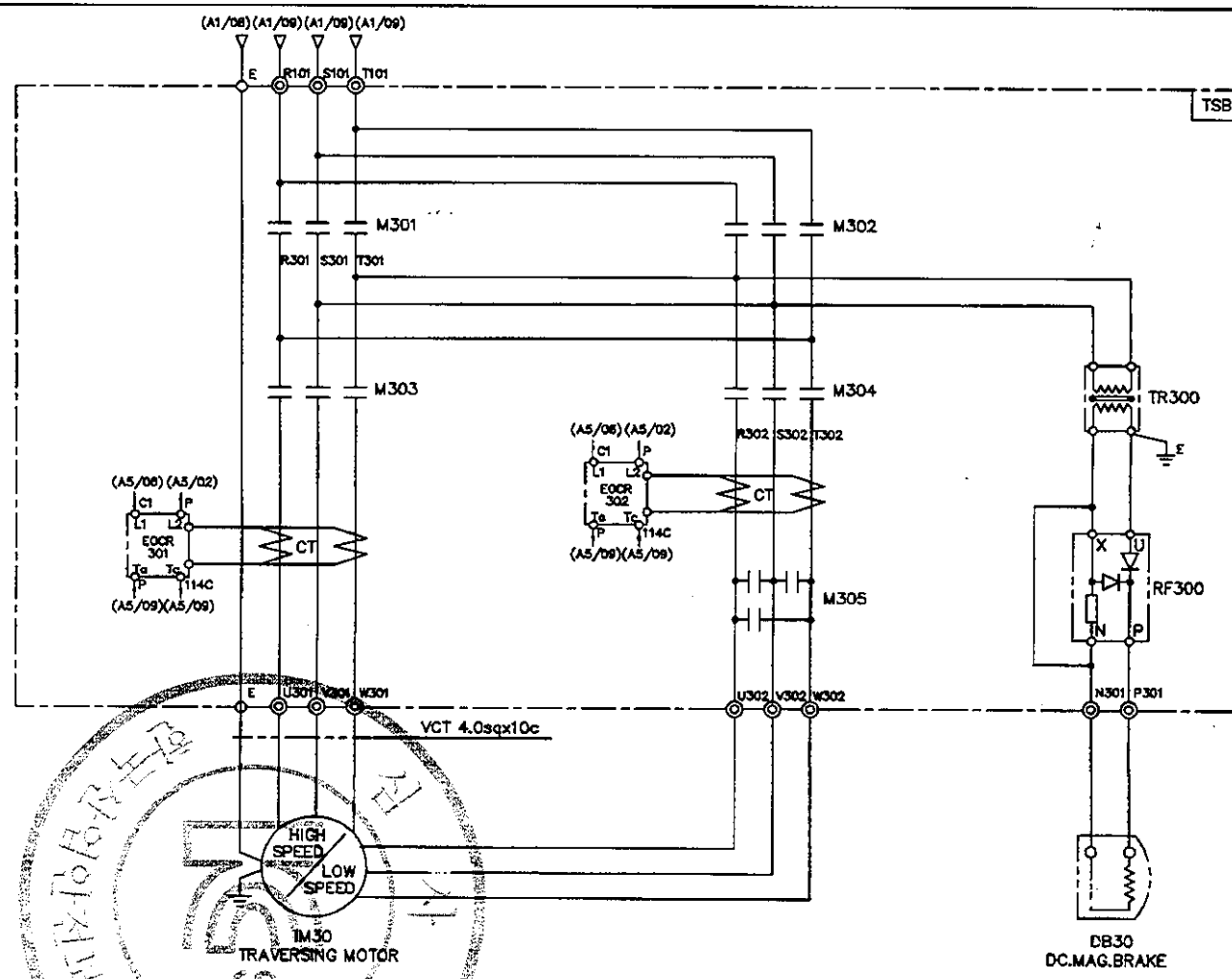

SPECIFICATION / SYMBOLS		TRAVERSING MOTOR	DC MAG' BRAKE	MAGNET CONTACTOR		SILICON RECTIFIER	ELECTRIC OVER CURRENT RELAY	TRANSFORMER
DESCRIPTION		IM30	DB30	M301 , M302 , M303	M304 , M305	RF 300	EOCR 301,302	TR300
	460V	0.5/0.25KWx6/12P AC3PH 460V 60Hz	DC 100V	DOC-22P	DOC-22R	SR-30	SS-05	AC460/220V, 300VA
	460V	0.8/0.4KWx4/8P AC3PH 460V 60Hz	DC 100V	DOC-22P	DOC-22R	SR-30	SS-05	AC460/220V, 300VA
SELECTION / MAKER		KUKDONG		DAERYUK		ASECO		SHINHAN

MK	DATE	REVISIONS	CHK.	APP.
4				
3				
2				
1				

CUSTOMER		DRAWING	DESIGN	CHECKED	APPROVED	SCALE	DATE	ORDER NO.
DRAWING TITLE	TRAVERSING POWER CONTROL CIRCUIT DIAGRAM					NONE		
		극동호이스트 주식회사 KUK DONG HOIST CO., LTD.				DWG. NO	KD02E55	

192.168.11.155 / 2011-06-17 15:51:43

1	2	3	4	5	6	7	8	9	10	11	12	13	14	15	16	17	18	19	20
POWER CIRCUIT																			ADR'S NO.
TRAVERSING MOTION																			C2

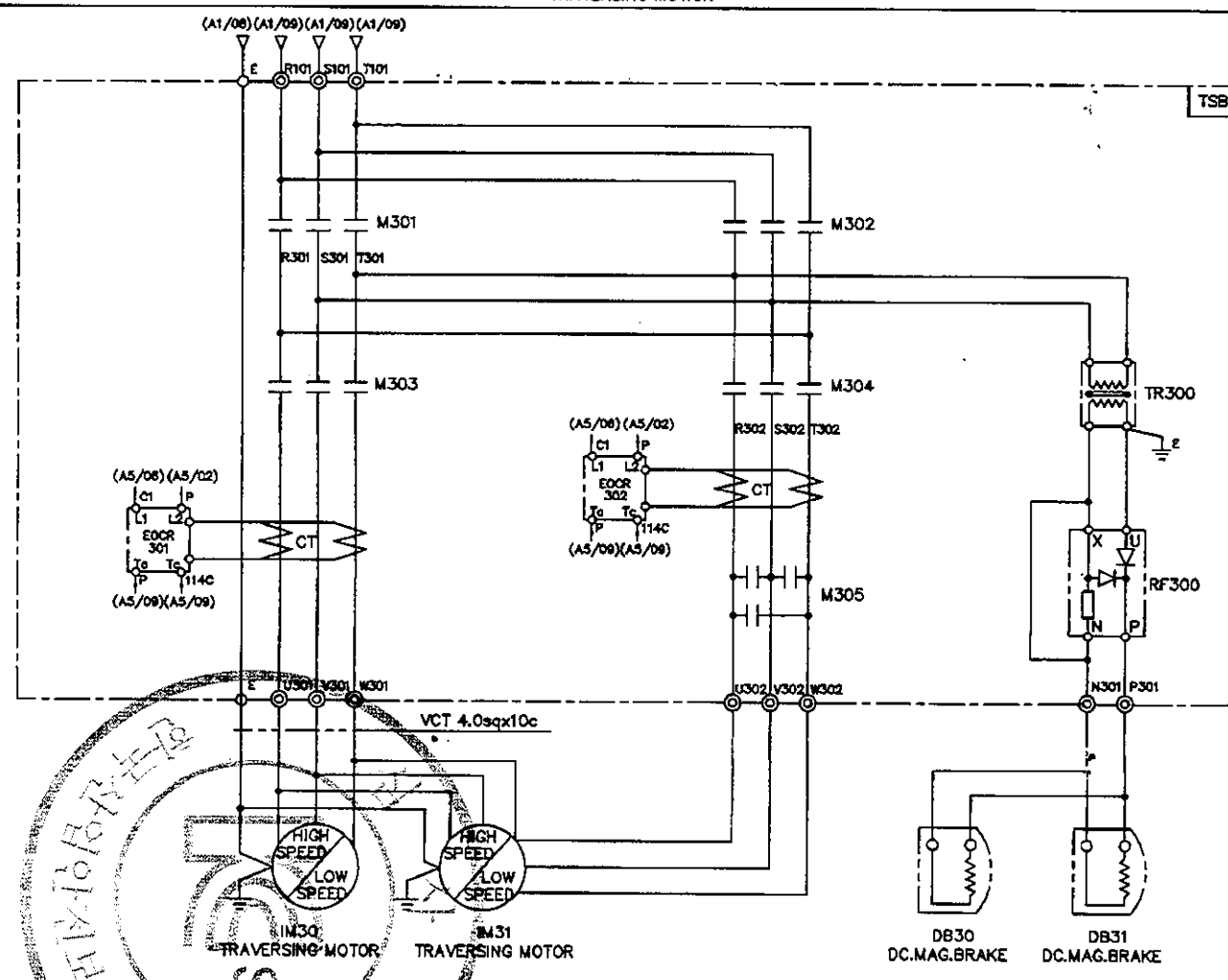

SPECIFICATION / SYMBOLS / DESCRIPTION		TRAVERSING MOTOR	DC MAG' BRAKE	MAGNET CONTACTOR		SILICON RECTIFIER	ELECTRIC OVER CURRENT RELAY	TRANSFORMER
		IM 30 , 1M31	DB30 , DB31	M301 , M302 , M303	M304 , M305	RF 300	EOCR 301,302	TR300
	460V	0.5/0.25KWx6/12P AC3PH 460V 60Hz	DC 100V	DOC-22P	DOC-22R	SR-30	SS-05	AC460/220V, 300VA
	460V	0.8/0.4KWx4/8P AC3PH 460V 60Hz	DC 100V	DOC-22P	DOC-22R	SR-30	SS-05	AC460/220V, 300VA
SELECTION / MAKER		KUKDONG		DAERYUK		ASECO		SHINHAN

MK	DATE	REVISIONS	CHK.	APP.
4				
3				
2				
1				

CUSTOMER		DRAWING	DESIGN	CHECKED	APPROVED	SCALE	DATE	ORDER NO.
DRAWING TITLE	TRAVERSING POWER CONTROL CIRCUIT DIAGRAM					NONE		
		KD 극동호이스트 주식회사 KUK DONG HOIST CO., LTD.				DWG. NO	KD02E56	

192.168.11.155 / 2011-06-17 15:51:43

192.168.11.155 / 2011-06-17 15:51:43

불법복제 및 배포금지

ADR'S NO.

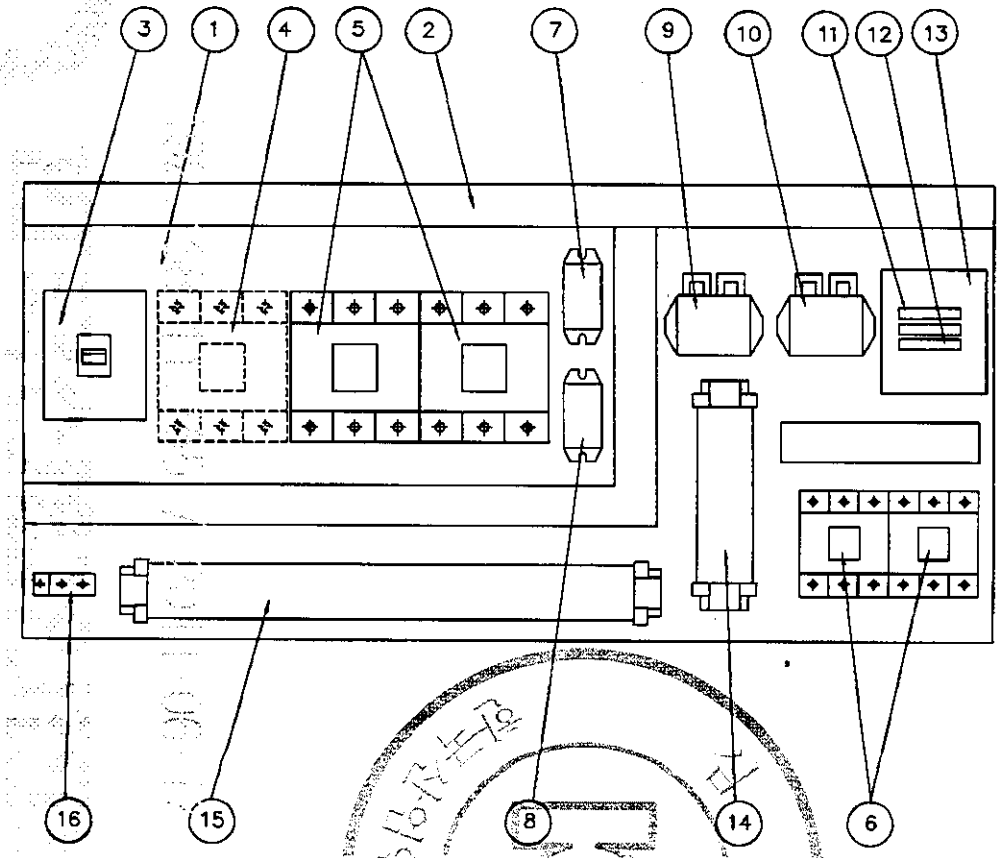

NO	DESCRIPTION	SPECIFICATION	Q'TY	REMARK
1	CHASSIS PLATE		1	아 연 도 금
2	CABLE DUCT	–	1	
3	N.F.B	33AF/15AT	1	HOISTING
4	MAGNET CONTACTOR	DOC-22P	1	MAIN MAG.
5	MAGNET CONTACTOR	DOC-22P	2	HOISTING
6	MAGNET CONTACTOR	DOC-22P	2	TRAVERSING
7	SILICON RECTIFIER	SR-30	1	HOISTING
8	SILICON RECTIFIER	SR-30	1	TRAVERSING
9	E.O.C.R	SS-30	1	HOISTING
10	E.O.C.R	SS-05	1	TRAVERSING
11	FUSE	1 A	2	
12	FUSE	3 A	1	
13	TRANSFORMER	480V/110,120V/60VA	1	
14	UPPER LIMIT	AC 600V/75A	1	
15	TERMINAL BLOCK	60A,15A		
16	EARTH TERMINAL	3tx20x50	1	

NOTE

1. UPPER LIMIT LS-1,LS-2의 접점 허용 전류. 용량. : AC 600V, 75A
2. POWER SOURCE : AC. 3ø 480V 60HZ
3. EARTH TERMINAL RESISTANCE : 0.018Ω

NOTE

1. 전선의 색상은 다음과 같다.
   1) 흑색 : 교류 및 직류 전원선로
   2) 적색 : 교류제어회로
   3) 주황색 : 외부 전원에서 공급되는 연동장치 제어회로
   4) 녹색 또는 녹색과 황색 혼용 : 접지선
2. CABLE MATERIAL : KIV OR EQUIVALENT
   MIN SIZE : 2.5sq
3. 제어용 전선 : 2.5mm KIV,HIV
4. 제작시 다소 변경 될수있음.
5. 외함 개방구조는 다음과 같을것.
   1) 외함 개방시 충전부분이 차단되도록 할것.
   2) 외함 개방후 충전되어있는 부분은 IP2X 이상의 직접 접촉 방호가 되어있을것.

MK	DATE	REVISIONS	CHK.	APP.
4				
3				
2				
1				

CUSTOMER	
DRAWING TITLE	HOIST CONTROL BOX (고속)
	ARRANGEMENT DRAWING

DRAWING	DESIGN	CHECKED	APPROVED	SCALE	DATE	ORDER NO.
				NONE		

KD 극동호이스트 주식회사 KUK DONG HOIST CO., LTD.

DWG. NO KD02BA61

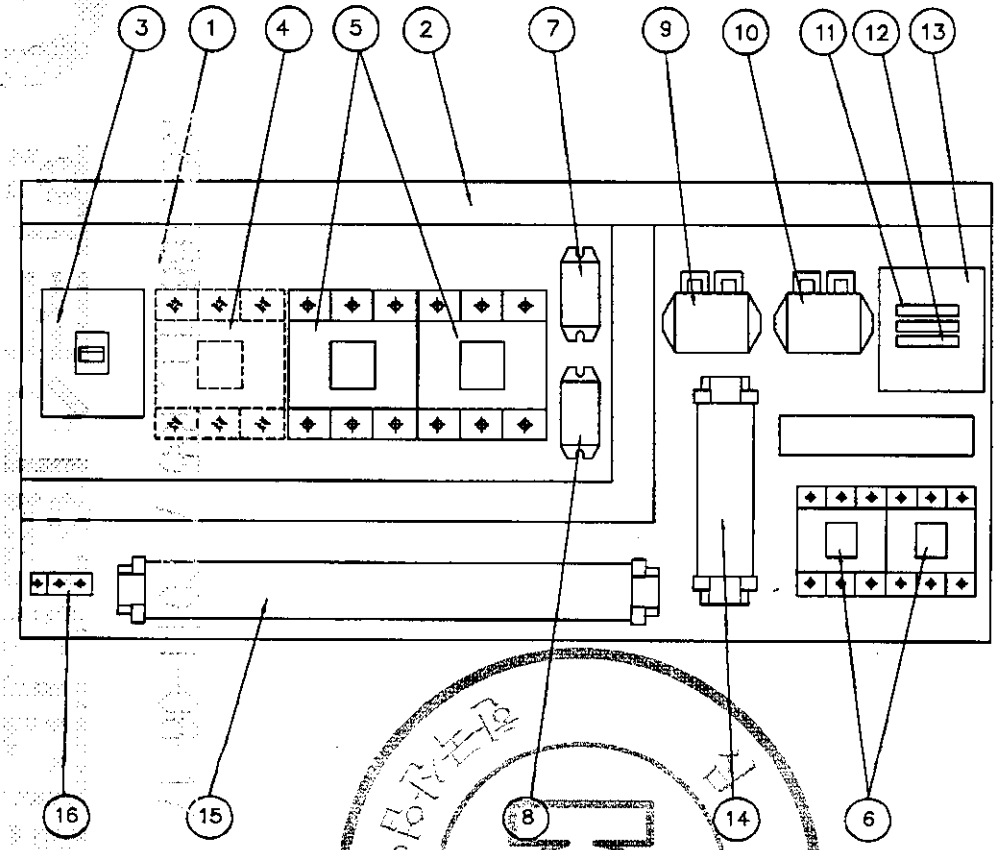

NO	DESCRIPTION	SPECIFICATION	Q'TY	REMARK
1	CHASSIS PLATE		1	아 연 도 금
2	CABLE DUCT	–	1	
3	N.F.B	33AF/15AT	1	HOISTING
4	MAGNET CONTACTOR	DOC-22P	1	MAIN MAG.
5	MAGNET CONTACTOR	DOC-22P	2	HOISTING
6	MAGNET CONTACTOR	DOC-22P	2	TRAVERSING
7	SILICON RECTIFIER	SR-30	1	HOISTING
8	SILICON RECTIFIER	SR-30	1	TRAVERSING
9	E.O.C.R	SS-30	1	HOISTING
10	E.O.C.R	SS-05	1	TRAVERSING
11	FUSE	1 A	2	
12	FUSE	2 A	1	
13	TRANSFORMER	480V/110,120V/ 60VA	1	
14	UPPER LIMIT	AC 600V/75A	1	
15	TERMINAL BLOCK	60A,15A		
16	EARTH TERMINAL	3tx20x50	1	

NOTE
1. UPPER LIMIT LS-1,LS-2의 접점 허용 전류 용량 : AC 600V, 75A
2. POWER SOURCE : AC. 3ø 480V 60HZ
3. EARTH TERMINAL RESISTANCE : 0.018Ω

NOTE
1. 전선의 색상은 다음과 같다.
   1) 흑색 : 교류 및 직류 전원선로
   2) 적색 : 교류제어회로
   3) 주황색 : 외부 전원에서 공급되는 연동장치 제어회로
   4) 녹색 또는 녹색과 황색 혼용 : 접지선
2. CABLE MATERIAL : KIV OR EQUIVALENT
   MIN SIZE : 2.5sq
3. 제어용 전선 : 2.5mm KIV,HIV
4. 제작시 다소 변경 될수있음.
5. 외함 개방구조는 다음과 같을것.
   1) 외함 개방시 충전부분이 차단되도록 할것.
   2) 외함 개방후 충전되어있는 부분은 IP2X 이상의 직접 접촉 방호가 되어있을것.

MK	DATE	REVISIONS	CHK.	APP.
4				
3				
2				
1				

CUSTOMER	
DRAWING TITLE	HOIST CONTROL BOX (저속)
	ARRANGEMENT DRAWING

DRAWING	DESIGN	CHECKED	APPROVED	SCALE	DATE	ORDER NO.
				NONE		

KD 극동호이스트 주식회사 KUK DONG HOIST CO., LTD.

DWG. NO KD02BA62

ADR'S NO.

불법복제 및 배포금지

192.168.11.155 / 2011-06-17 15:51:43

192.168.11.155 / 2011-06-17 15:51:43

本图纸版权所有 侵权必究

POWER CIRCUIT

ADR'S NO. B1

HOISTING MOTION | TRAVERSING MOTION

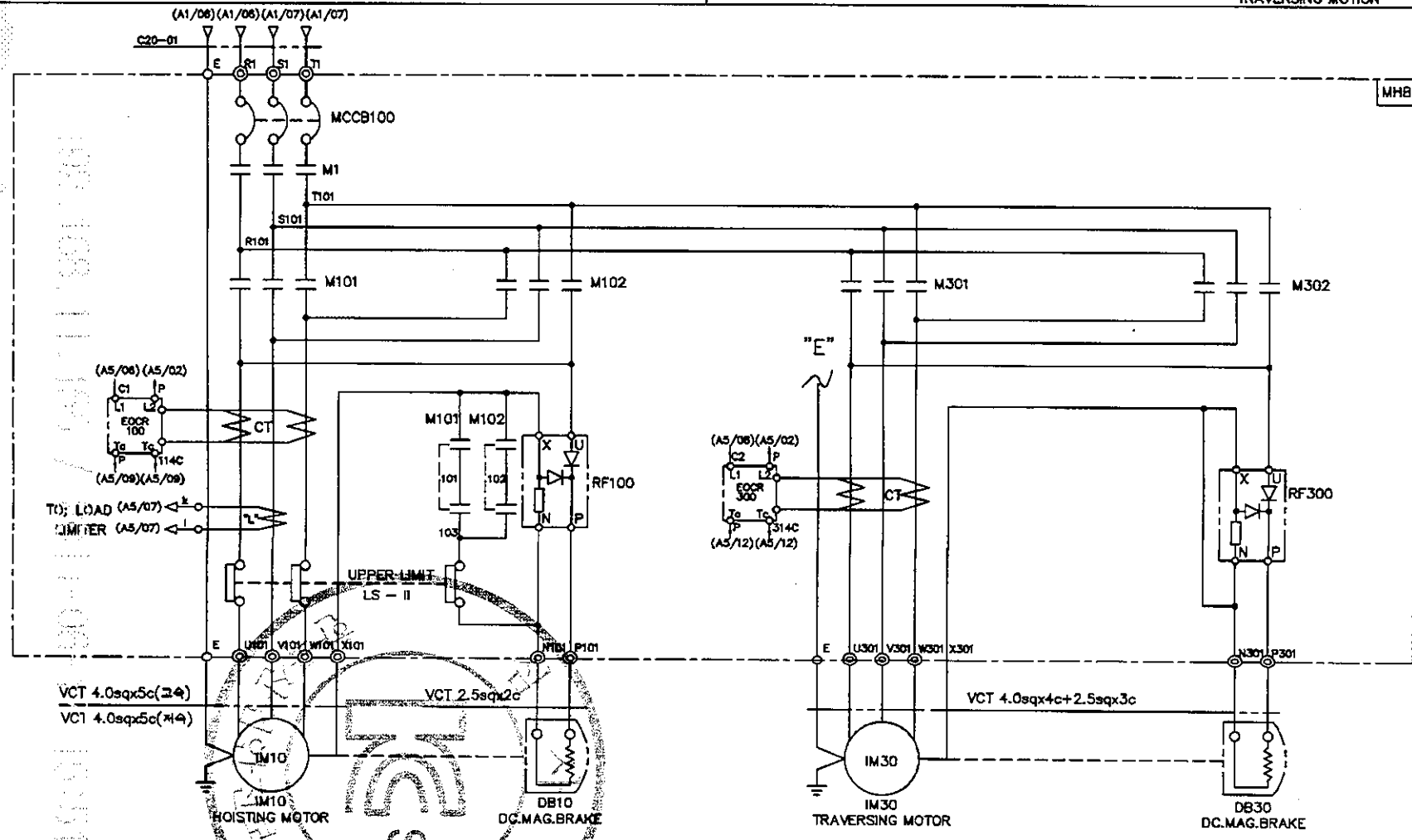

SPECIFICATION / SYMBOLS	HOISTING POWER	HOISTING MOTOR	TRAVERSING MOTOR	DC.MAG BRAKE	NO FUSE BREAKER	TRANSFORMER	FUSE		MAIN MAGNET	MAGNET CONTACTOR		UPPER LIMIT	ELECTRIC OVER CURRENT RELAY		SILICON RECTIFIER		LOAD LIMITER	CABLE
DESCRIPTION	HOIST	IM 10	IM 30	DB10, 30	MCCB100	TR 1	F11,F12	F13	M1	M101,M102	M301,M302	LS-I, LS-II	EOCR100	EOCR300	RF100	RF300	LOAD LIMITER	C20-01
	2TON AC 3PH 480V 60Hz	3.7KW x 4P	0.75KW x 4P	DC 100V	DBE-33AF/15AT	480/110,120V/60VA	1A	3A	DOC-22P	DOC-22P	DOC-22P	AC 600V 75A	SS-30	SS-05	SR-30	SR-30	JDL-100	VFCT 4.0sqx4c
	2TON AC 3PH 480V 60Hz	1.8KW x 8P	0.5KW x 6P	DC 100V	DBE-33AF/15AT	480/110,120V/60VA	1A	2A	DOC-22P	DOC-22P	DOC-22P	AC 600V 75A	SS-30	SS-05	SR-30	SR-30	JDL-100	VFCT 4.0sqx4c
SELECTION / MAKER		KUKDONG			DAERYUK	SHINHAN	–		DAERYUK			KUKDONG	ASECO				JUNGHO	DONGIL

MK	DATE	REVISIONS	CHK.	APP.
4				
3				
2				
1				

CUSTOMER		DRAWING	DESIGN	CHECKED	APPROVED	SCALE	DATE	ORDER NO.
DRAWING TITLE	HOISTING & T/S POWER CONTROL CIRCUIT DIAGRAM					NONE		
		KD 국동호이스트 주식회사 KUK DONG HOIST CO., LTD.				DWG. NO	KD02E61	

192.168.11.155 / 2011-06-17 15:51:43

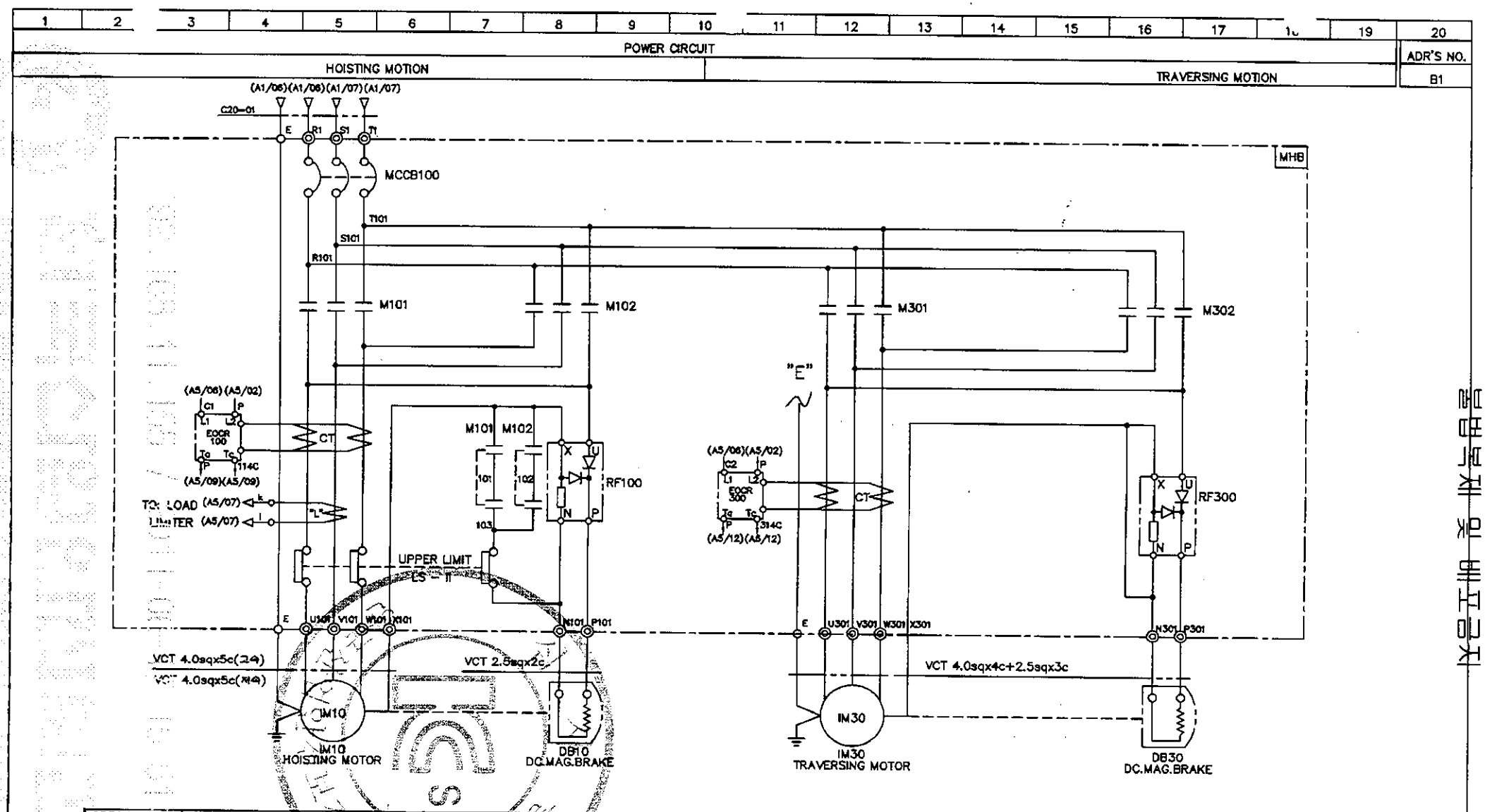

SPECIFICATION / SYMBOLS	HOISTING POWER	HOISTING MOTOR	TRAVERSING MOTOR	DC.MAG BRAKE	NO FUSE BREAKER	TRANSFORMER	FUSE		MAGNET CONTACTOR		UPPER LIMIT	ELECTRIC OVER CURRENT RELAY		SILICON RECTIFIER		LOAD LIMITER	CABLE
DESCRIPTION	HOIST	IM 10	IM 30	DB10, 30	MCCB100	TR 1	F11,F12	F13	M101,M102	M301,M302	LS-I, LS-II	EOCR100	EOCR300	RF100	RF300	LOAD LIMITER	C20-01
	2TON AC 3PH 480V 60Hz	3.7KW x 4P	0.75KW x 4P	DC 100V	DBE-33AF/15AT	480/110,120V/60VA	1A	3A	DOC-22P	DOC-22P	AC 600V 75A	SS-30	SS-05	SR-30	SR-30	JDL-100	VFCT 4.0sqx4c
	2TON AC 3PH 480V 60Hz	1.8KW x 6P	0.5KW x 6P	DC 100V	DBE-33AF/15AT	480/110,120V/60VA	1A	2A	DOC-22P	DOC-22P	AC 600V 75A	SS-30	SS-05	SR-30	SR-30	JDL-100	VFCT 4.0sqx4c
SELECTION / MAKER	KUKDONG				DAERYUK	SHINHAN	–		DAERYUK		KUKDONG	ASECO				JUNGHO	DONGIL

MK	DATE	REVISIONS	CHK.	APP.
4				
3				
2				
1				

CUSTOMER		DRAWING	DESIGN	CHECKED	APPROVED	SCALE	DATE	ORDER NO.
DRAWING TITLE	HOISTING & T/S POWER CONTROL CIRCUIT DIAGRAM					NONE		
		국동호이스트 주식회사 KUK DONG HOIST CO., LTD.				DWG. NO	KD02E62	

192.168.11.155 / 2011-06-17 15:51:43

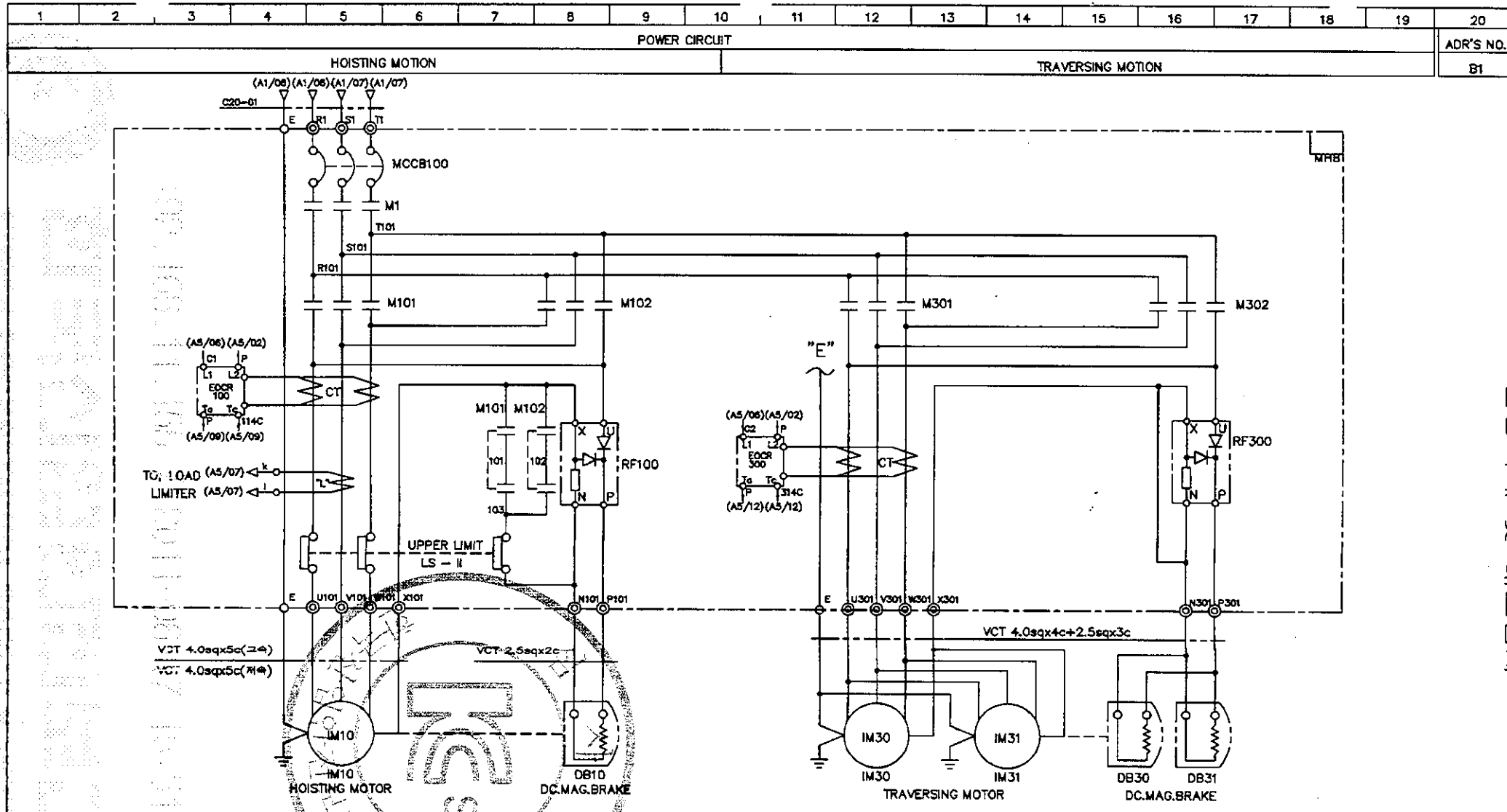

SPECIFICATION / SYMBOLS	HOISTING POWER	HOISTING MOTOR	TRAVERSING MOTOR	DC.MAG. BRAKE	NO FUSE BREAKER	TRANSFORMER	FUSE		MAIN MAGNET	MAGNET CONTACTOR		UPPER LIMIT	ELECTRIC OVER CURRENT RELAY		SILICON RECTIFIER		LOAD LIMITER	CABLE
DESCRIPTION	HOIST	IM 10	IM 30,31	DB10, 30	MCCB100	TR 1	F11,F12	F13	M1	M101,M102	M301,M302	LS-I, LS-II	EOCR100	EOCR300	RF100	RF300	LOAD LIMITER	C20-01
	2TON AC 3PH 480V 60Hz	3.7KW x 4P	0.75KW x 4P	DC 100V	DBE-33AF/15AT	480/110,120V/60VA	1A	3A	DOC-22P	DOC-22P	DOC-22P	AC 600V 75A	SS-30	SS-05	SR-30	SR-30	JDL-100	VFCT 4.0sqx4c
	2TON AC 3PH 480V 60Hz	1.8KW x 8P	0.5KW x 6P	DC 100V	DBE-33AF/15AT	480/110,120V/60VA	1A	2A	DOC-22P	DOC-22P	DOC-22P	AC 600V 75A	SS-30	SS-05	SR-30	SR-30	JDL-100	VFCT 4.0sqx4c
SELECTION / MAKER	KUKDONG				DAERYUK	SHINHAN	–		DAERYUK			KUKDONG	ASECO				JUNGHO	DONGIL

MK	DATE	REVISIONS	CHK.	APP.
4				
3				
2				
1				

CUSTOMER		DRAWING	DESIGN	CHECKED	APPROVED	SCALE	DATE	ORDER NO.
DRAWING TITLE	HOISTING POWER & CONTROL CIRCUIT DIAGRAM					NONE		
		KD 국동호이스트 주식회사 KUK DONG HOIST CO., LTD.				DWG. NO	KD02E63	

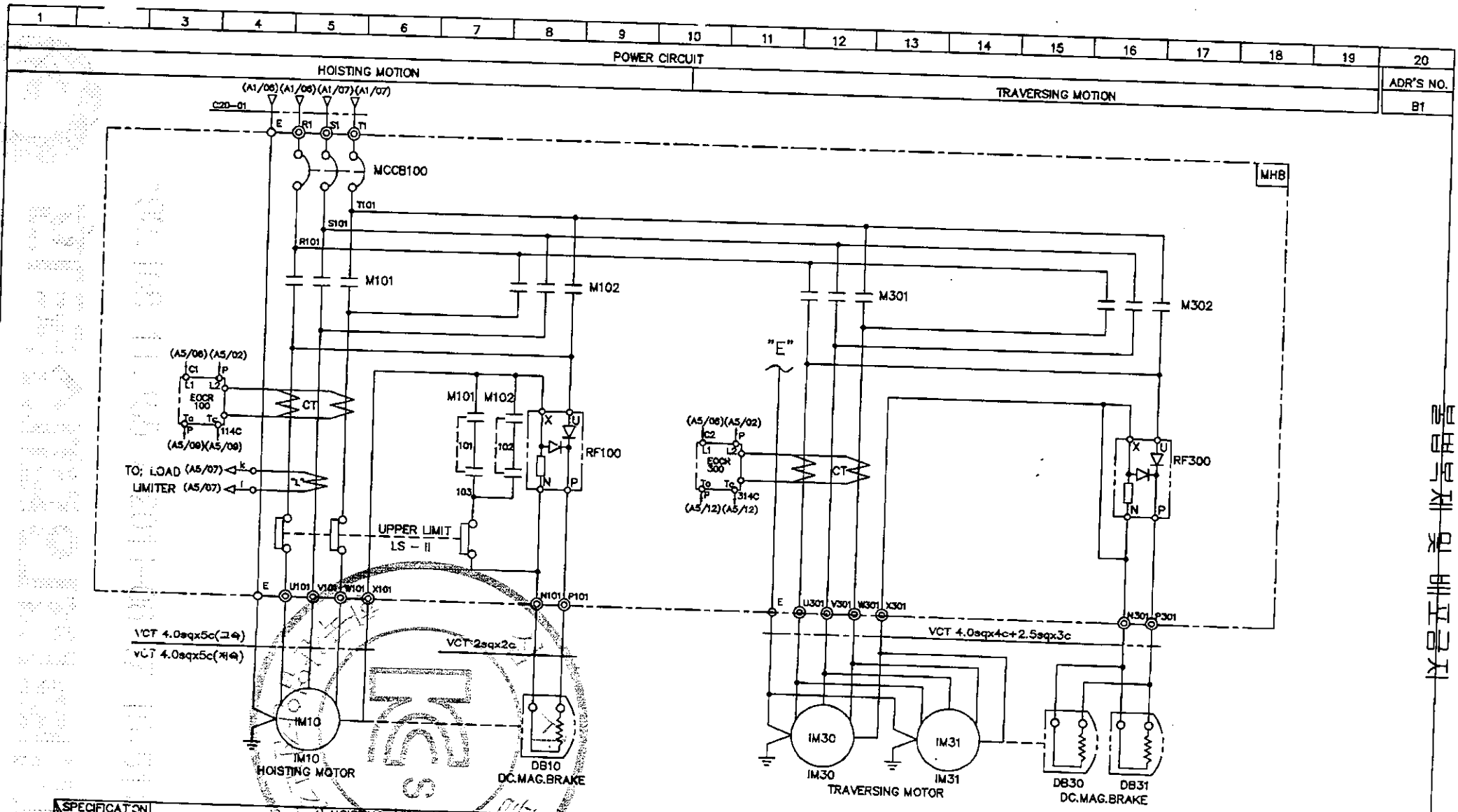

SPECIFICATION / SYMBOLS / DESCRIPTION	HOISTING POWER	HOISTING MOTOR	TRAVERSING MOTOR	DC.MAG BRAKE	NO FUSE BREAKER	TRANSFORMER	FUSE		MAGNET CONTACTOR		UPPER LIMIT	ELECTRIC OVER CURRENT RELAY		SILICON RECTIFIER		LOAD LIMITER	CABLE
	HOIST	IM 10	IM 30,31	DB10, 30	MCCB100	TR 1	F11,F12	F13	M101,M102	M301,M302	LS-I, LS-II	EOCR100	EOCR300	RF100	RF300	LOAD LIMITER	C20-01
	2TON AC 3PH 480V 60Hz	3.7KW x 4P	0.75KW x 4P	DC 100V	DBE-33AF/15AT	480/110,120V/60VA	1A	3A	DOC-22P	DOC-22P	AC 600V 75A	SS-30	SS-05	SR-30	SR-30	JDL-100	VFCT 4.0sqx4c
	2TON AC 3PH 480V 60Hz	1.8KW x 6P	0.5KW x 6P	DC 100V	DBE-33AF/15AT	480/110,120V/60VA	1A	2A	DOC-22P	DOC-22P	AC 600V 75A	SS-30	SS-05	SR-30	SR-30	JDL-100	VFCT 4.0sqx4c
SELECTION / MAKER	KUKDONG				DAERYUK	SHINHAN	-		DAERYUK		KUKDONG	ASECO				JUNGHO	DONGIL

MK	DATE	REVISIONS	CHK.	APP.
4				
3				
2				
1				

CUSTOMER		DRAWING	DESIGN	CHECKED	APPROVED	SCALE	DATE	ORDER NO.
DRAWING TITLE	HOISTING POWER & CONTROL CIRCUIT DIAGRAM					NONE		

국동호이스트 주식회사
KUK DONG HOIST CO., LTD.

DWG. NO KD02E64

192.168.11.155 / 2011-06-17 15:51:43

1	2	3	4	5	6	7	8	9	10	11	12	13	14	15	16	17	18	19	20

POWER CIRCUIT

TRAVERSING MOTION

ADR'S NO. C2

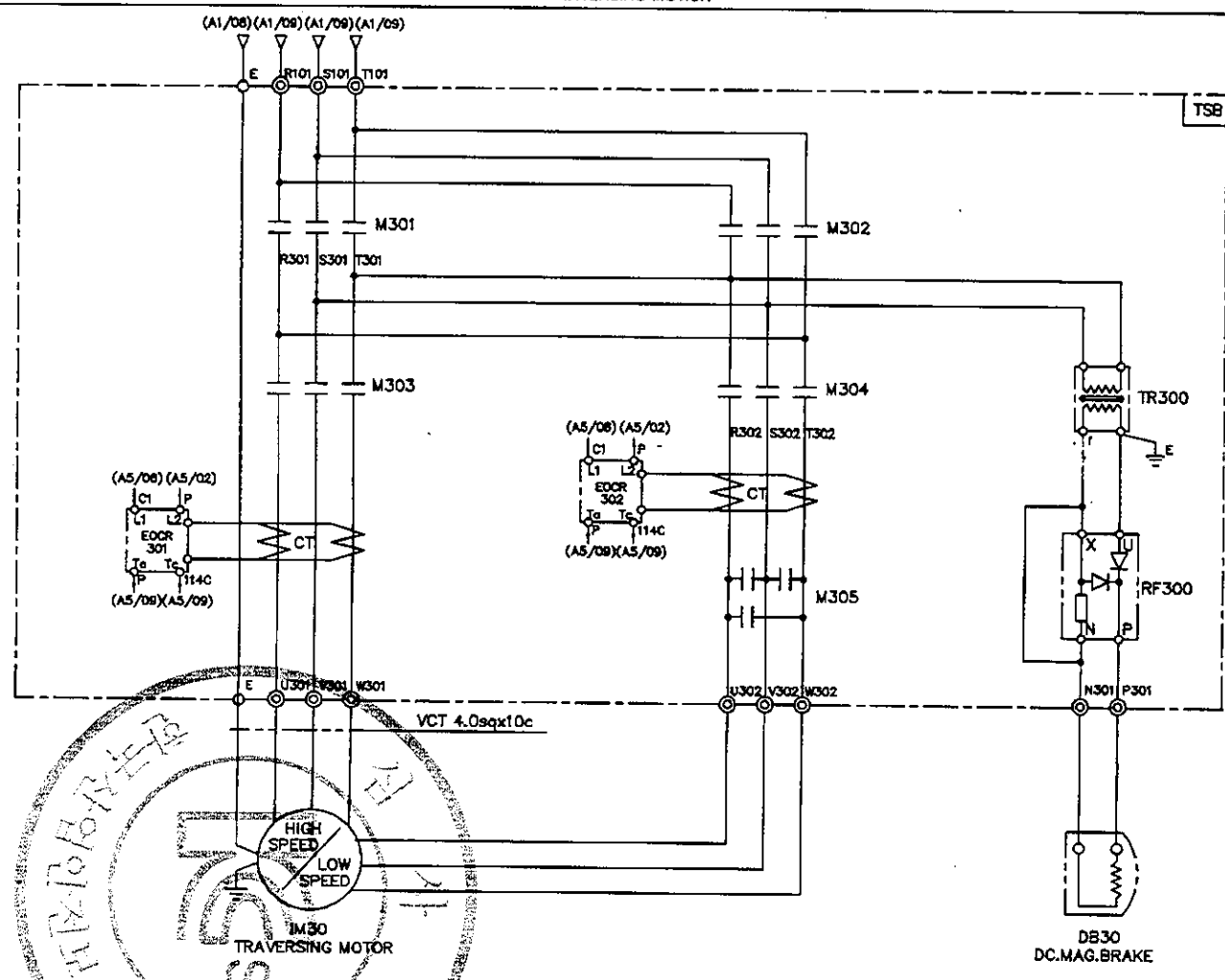

SPECIFICATION / SYMBOLS		TRAVERSING MOTOR	DC MAG' BRAKE	MAGNET CONTACTOR		SILICON RECTIFIER	ELECTRIC OVER CURRENT RELAY	TRANSFORMER
DESCRIPTION		IM30	DB30	M301 , M302 , M303	M304 , M305	RF 300	EOCR 301,302	TR300
	480V	0.5/025KWx6/12P AC3PH 480V 60Hz	DC 100V	DOC-22P	DOC-22R	SR-30	SS-05	AC480/220V, 300VA
	480V	0.8/0.4KWx4/8P AC3PH 480V 60Hz	DC 100V	DOC-22P	DOC-22R	SR-30	SS-05	AC480/220V, 300VA
SELECTION / MAKER		KUKDONG		DAERYUK		ASECO		SHINHAN

MK	DATE	REVISIONS	CHK.	APP.
4				
3				
2				
1				

CUSTOMER		DRAWING	DESIGN	CHECKED	APPROVED	SCALE	DATE	ORDER NO.
DRAWING TITLE	TRAVERSING POWER CONTROL CIRCUIT DIAGRAM					NONE		
		구동호이스트 주식회사 KUK DONG HOIST CO., LTD.				DWG. NO	KD02E65	

192.168.11.155 / 2011-06-17 15:51:43

1	2	3	4	5	6	7	8	9	10	11	12	13	14	15	16	17	18	19	20

POWER CIRCUIT

TRAVERSING MOTION

ADR'S NO. C2

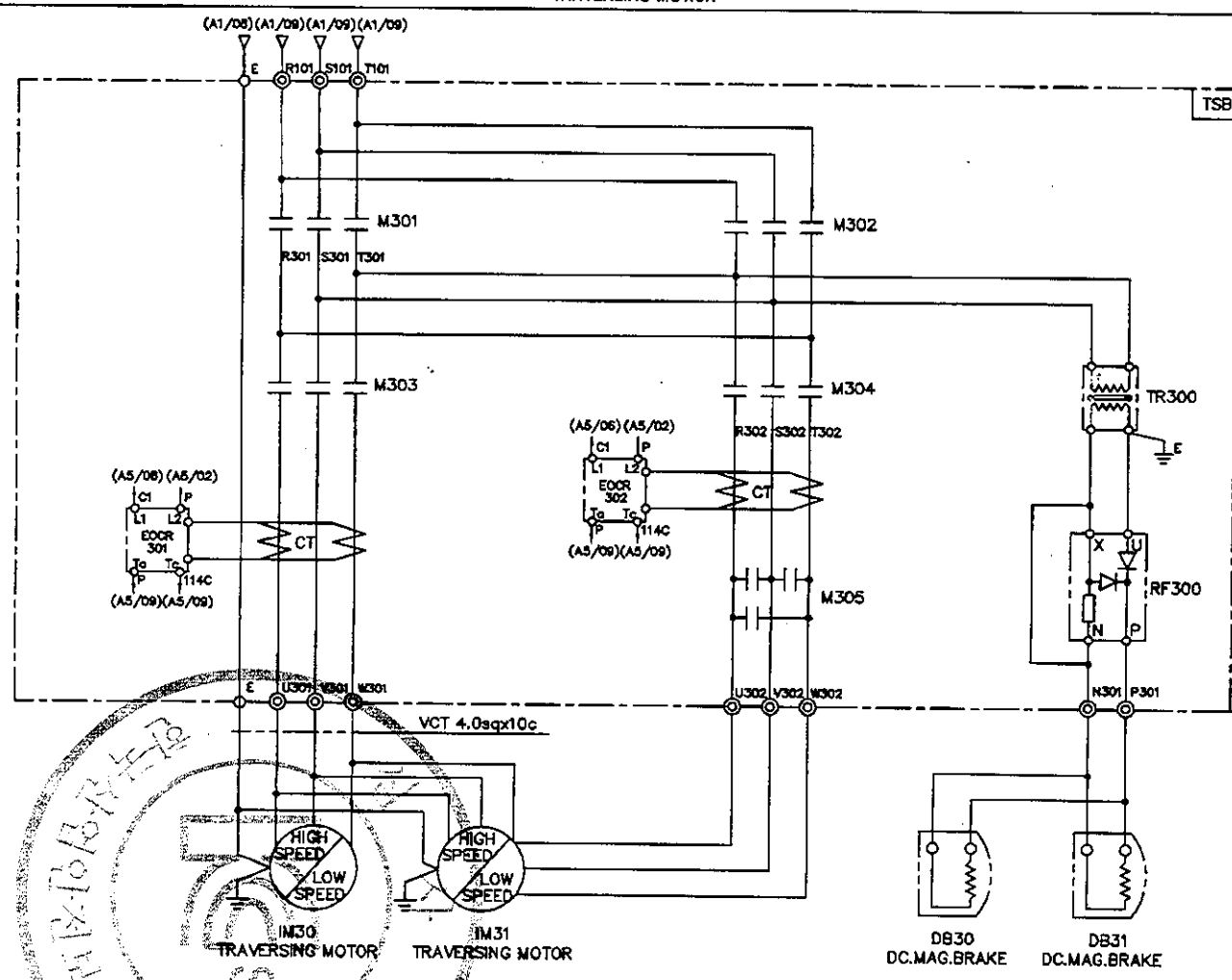

SPECIFICATION / SYMBOLS		TRAVERSING MOTOR	DC MAG' BRAKE	MAGNET CONTACTOR		SILICON RECTIFIER	ELECTRIC OVER CURRENT RELAY	TRANSFORMER
DESCRIPTION		IM 30, 1M31	DB30 , DB31	M301 , M302 , M303	M304 , M305	RF 300	EOCR 301,302	TR300
	480V	0.5/0.25KWx6/12P AC3PH 480V 60Hz	DC 100V	DOC-22P	DOC-22R	SR-30	SS-05	AC480/220V, 300VA
	480V	0.6/0.4KWx4/8P AC3PH 480V 60Hz	DC 100V	DOC-22P	DOC-22R	SR-30	SS-05	AC480/220V, 300VA
SELECTION MAKER		KUKDONG		DAERYUK		ASECO		SHINHAN

MK	DATE	REVISIONS	CHK.	APP.
4				
3				
2				
1				

CUSTOMER		DRAWING	DESIGN	CHECKED	APPROVED	SCALE	DATE	ORDER NO.
DRAWING TITLE	TRAVERSING POWER CONTROL CIRCUIT DIAGRAM					NONE		
		국동호이스트 주식회사 KUK DONG HOIST CO., LTD.				DWG. NO	KD02E66	

192.168.11.155 / 2011-06-17 15:51:43

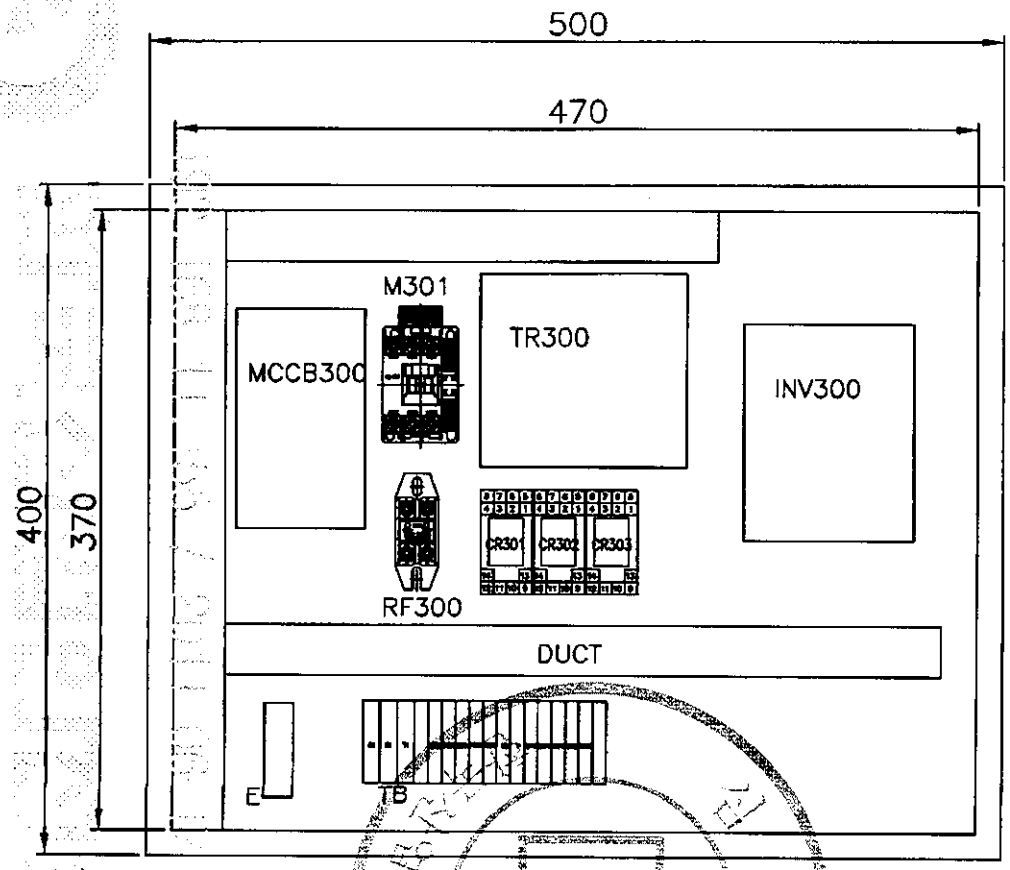

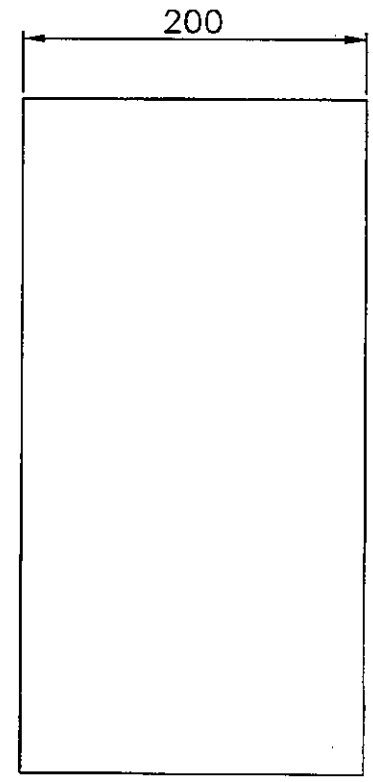

NO.	DESCRIPTION	MT'L	SUB QT'Y	TOTAL QT'Y	SUB WEIGHT(Kg)	TOTAL WEIGHT(Kg)	REMARKS.
2	수 판	SS400		1			
1	T/S BOX	PUR		1			
11	EARTH BUS BAR	PUR		1			
10	DUCT	PUR		1			
9	TERMINAL BLOCK	PUR		1			
8	INVERTER	PUR		1			
7	TR	PUR		1			
6	RELAY & SCOKET	PUR		1			
5	RF	PUR		1			
4	MC	PUR		1			
3	MCCB	PUR		1			

PROJECT				DATE	DIM
					mm
TITLE	T/S CONTROL PANEL(INVERTER)			SCALE	PROJECTION
				A3/3	3rd
DRAWN	DESIGNED	CHECKED	APPROVED	REF. DRAWING	

국동호이스트 주식회사
KUK DONG HOIST CO., LTD.

SHEET No.

DWG No. KD2E1001

192.168.11.155 / 2011-06-17 15:51:43

무단배포 및 복제금지

1	2	3	4	5	6	7	8	9	10	11	12	13	14	15	16	17	18	19	20

TRAVERSING MOTION

ADR'S NO.

POWER CIRCUIT DIAGRAM

CONTROL CIRCUIT DIAGRAM

BRAKE	EAST	WEST	HIGH SPEED

KD2EI002

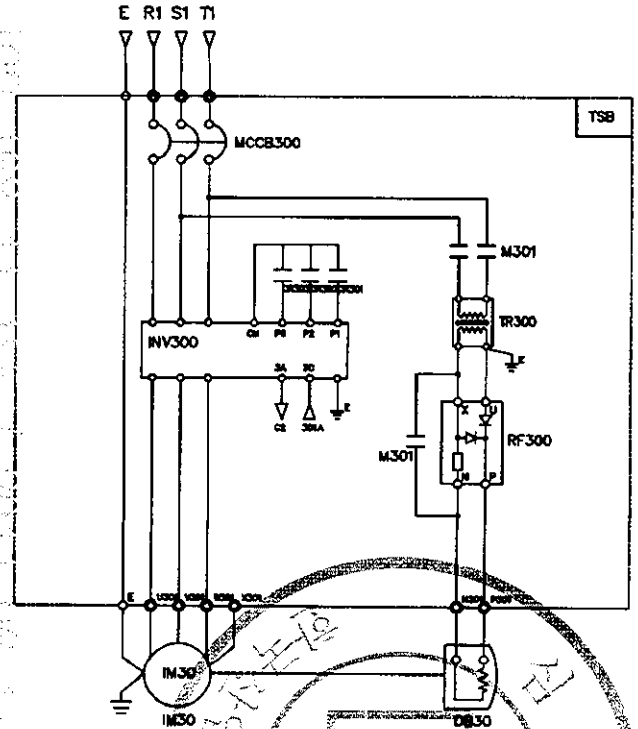

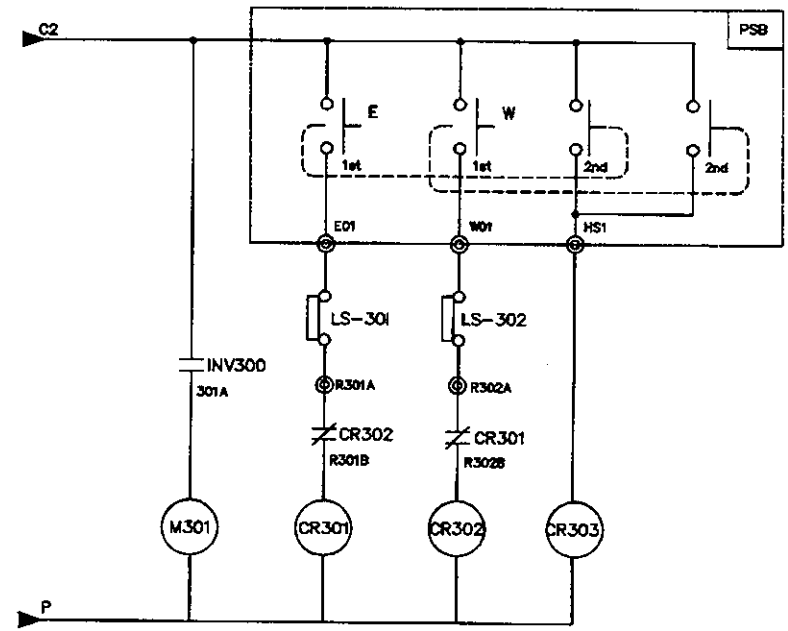

SPECIFICATION / SYMBOLS / DESCRIPTION	TRAVERSING POWER	TRAVERSING MOTOR	DC MAG' BRAKE	NO FUSE BREAKER	TRANSFORMER	BRAKE MAGNET	CONTROL RELAY	INVERTER	SILICON RECTIFIER	
		IM 30	DB30	MCCB300	TR 300	M301	CR301,302,303	INV300	RF300	
	AC 3PH 220V 60Hz	0.75KW x 4P	DC 100V	DBE-33AF/20AT	220/220V,300VA	DM-22C	MINI 4a4b(Coil AC110V)	SV015iG5A-2	SR-30	
	AC 3PH 380(440,460,480)V 60Hz	0.75KW x 4P	DC 100V	DBE-33AF/20AT	380(440,460,480)/220V,300VA	DM-22C	MINI 4a4b(Coil AC110V)	SV015iG5A-4	SR-30	
	AC 3PH 220V 60Hz	0.5KW x 6P	DC 100V	DBE-33AF/20AT	220/220V,300VA	DM-22C	MINI 4a4b(Coil AC110V)	SV015iG5A-2	SR-30	
	AC 3PH 380(440,460,480)V 60Hz	0.5KW x 6P	DC 100V	DBE-33AF/20AT	380(440,460,480)/220V,300VA	DM-22C	MINI 4a4b(Coil AC110V)	SV015iG5A-4	SR-30	
SELECTION / MAKER		KUK DONG HOIST						LS	ASAN	

MK	DATE	REVISIONS	CHK.	APP.
4				
3				
2				
1				

CUSTOMER	INVERTER CONTROL
DRAWING TITLE	TRAVERSING POWER & CONTROL CIRCUIT DIAGRAM

DRAWING	DESIGN	CHECKED	APPROVED	SCALE	DATE	ORDER NO.

국동호이스트 주식회사
KUK DONG HOIST CO., LTD.

DWG. NO KD2EI002

192.168.11.155 / 2011-06-17 15:51:43

1	2	3	4	5	6	7	8	9	10	11	12	13	14	15	16	17	18	19	20
TRAVERSING MOTION																			ADR'S NO.
POWER CIRCUIT DIAGRAM									CONTROL CIRCUIT DIAGRAM										
												BRAKE	EAST	WEST	HIGH SPEED				

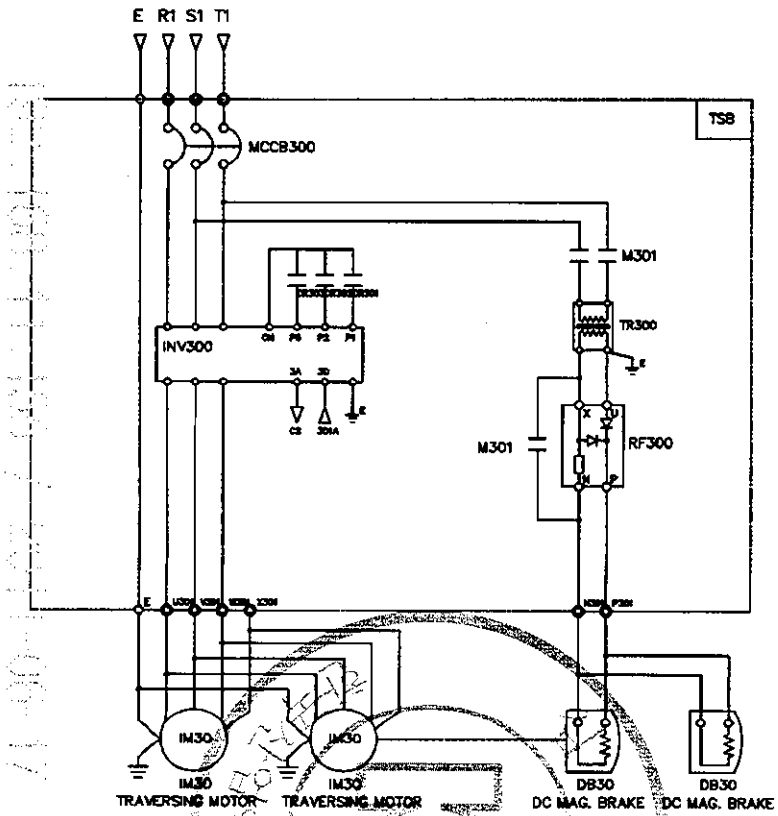

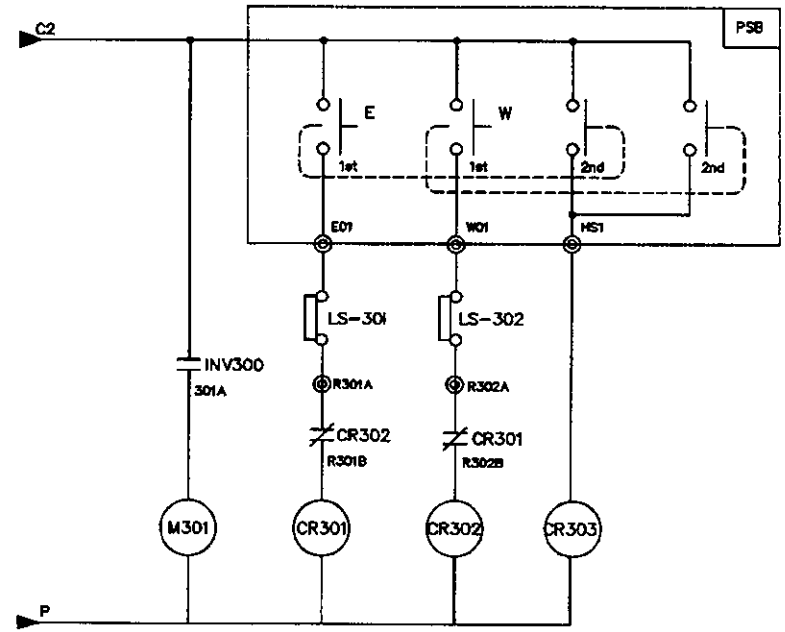

SPECIFICATION / SYMBOLS / DESCRIPTION	TRAVERSING POWER	TRAVERSING MOTOR	DC.MAG' BRAKE	NO FUSE BREAKER	TRANSFORMER	BRAKE MAGNET	CONTROL RELAY	INVERTER	SILICON RECTIFIER	
		IM 30	DB30	MCCB300	TR 300	M301	CR301,302,303	INV300	RF300	
	AC 3PH 220V 60Hz	0.75KW x 4P	DC 100V	DBE-33AF/20AT	220/220V,300VA	DM-22C	MINI 4a4b(Coil AC110V)	SV015iG5A-2	SR-30	
	AC 3PH 380(440,460,480)V 60Hz	0.75KW x 4P	DC 100V	DBE-33AF/20AT	380(440,460.480)/220V,300VA	DM-22C	MINI 4a4b(Coil AC110V)	SV015iG5A-4	SR-30	
	AC 3PH 220V 60Hz	0.5KW x 6P	DC 100V	DBE-33AF/20AT	220/220V,300VA	DM-22C	MINI 4a4b(Coil AC110V)	SV015iG5A-2	SR-30	
	AC 3PH 380(440,460,480)V 60Hz	0.5KW x 6P	DC 100V	DBE-33AF/20AT	380(440,460.480)/220V,300VA	DM-22C	MINI 4a4b(Coil AC110V)	SV015iG5A-4	SR-30	
SELECTION / MAKER	KUK DONG HOIST							LS	ASAN	

MK	DATE	REVISIONS	CHK.	APP.
4				
3				
2				
1				

CUSTOMER	INVERTER CONTROL
DRAWING TITLE	TRAVERSING POWER & CONTROL CIRCUIT DIAGRAM

DRAWING	DESIGN	CHECKED	APPROVED	SCALE	DATE	ORDER NO.

KD 극동호이스트 주식회사 KUK DONG HOIST CO., LTD.

DWG. NO KD2EI003

KD2EI003

192.168.11.155 / 2011-06-17 15:51:43

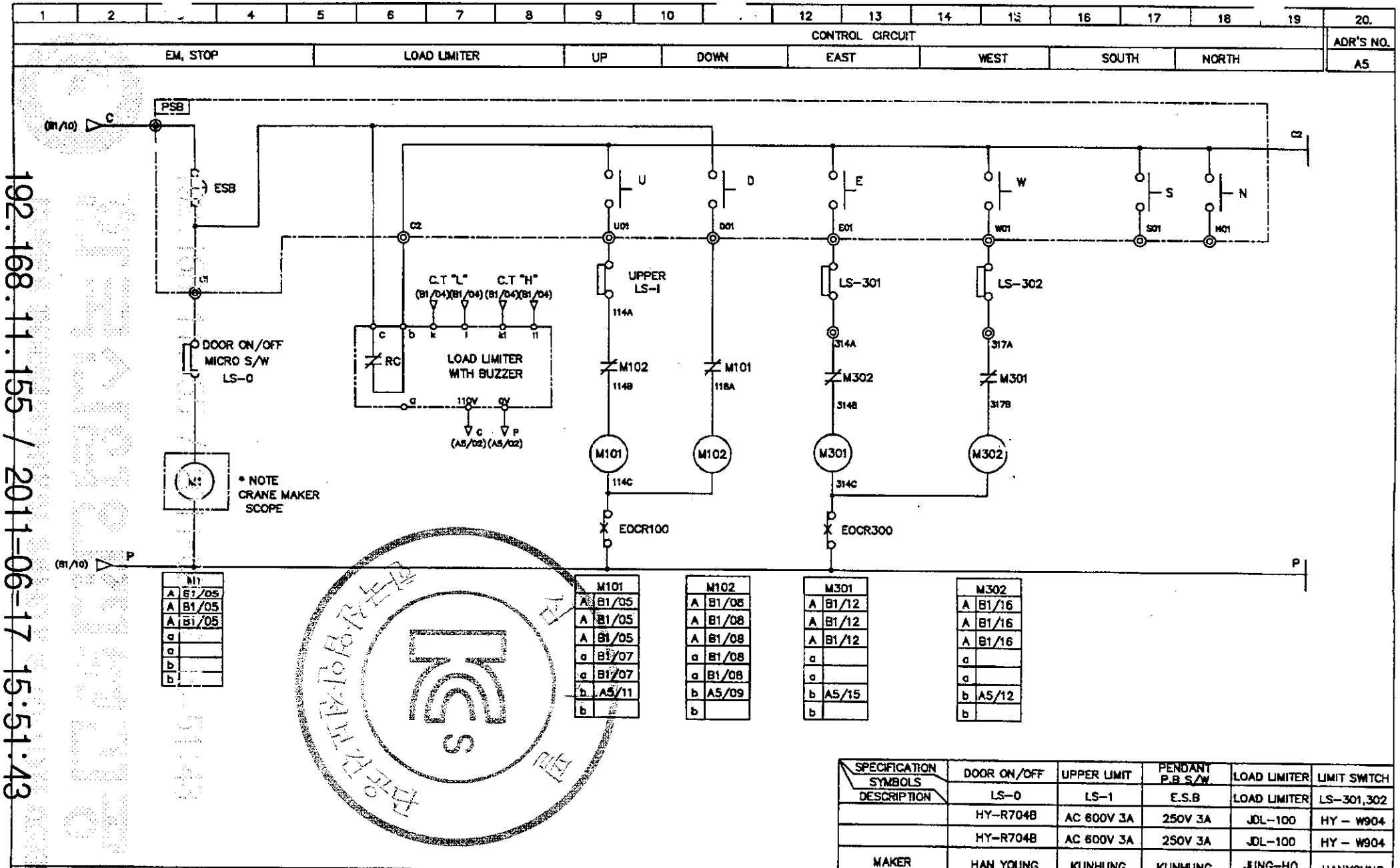

SPECIFICATION / SYMBOLS / DESCRIPTION	DOOR ON/OFF	UPPER LIMIT	PENDANT P.B S/W	LOAD LIMITER	LIMIT SWITCH
	LS-0	LS-1	E.S.B	LOAD LIMITER	LS-301,302
	HY-R704B	AC 600V 3A	250V 3A	JDL-100	HY - W904
	HY-R704B	AC 600V 3A	250V 3A	JDL-100	HY - W904
MAKER	HAN YOUNG	KUNHUNG	KUNHUNG	JUNG-HO	HANYOUNG

MK	DATE	REVISIONS	CHK.	APP.

CUSTOMER		DRAWING	DESIGN	CHECKED	APPROVED	SCALE	DATE	ORDER NO.
DRAWING TITLE	MAIN POWER 2 & CONTROL CIRCUIT DIAGRAM					NONE		
		KD 국동호이스트 주식회사 KUK DONG HOIST CO., LTD.				DWG. NO	KD02E002	

192.168.11.155 / 2011-06-17 15:51:43

무단배포 및 복제금지

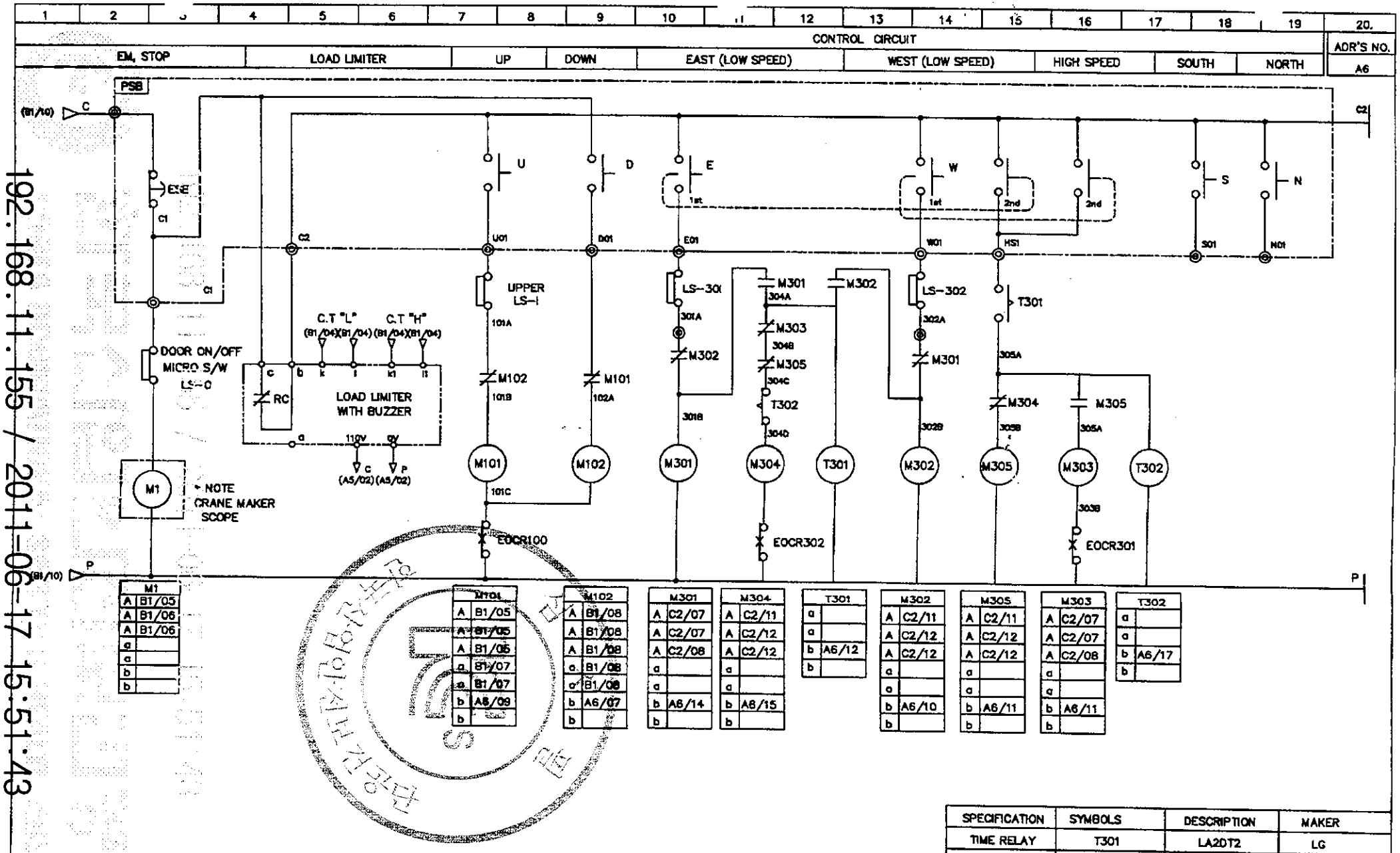

SPECIFICATION	SYMBOLS	DESCRIPTION	MAKER
TIME RELAY	T301	LA2DT2	LG
TIME RELAY	T302	LA3DR2	LG

MK	DATE	REVISIONS	CHK.	APP.

CUSTOMER		DRAWING	DESIGN	CHECKED	APPROVED	SCALE	DATE	ORDER NO.
DRAWING TITLE	MAIN POWER 2 & CONTROL CIRCUIT DIAGRAM					NONE		
		국동호이스트 주식회사 KUK DONG HOIST CO., LTD.				DWG. NO	KD2E004	

192.168.11.155 / 2011-06-17 15:51:43

무단배포 및 복제금지

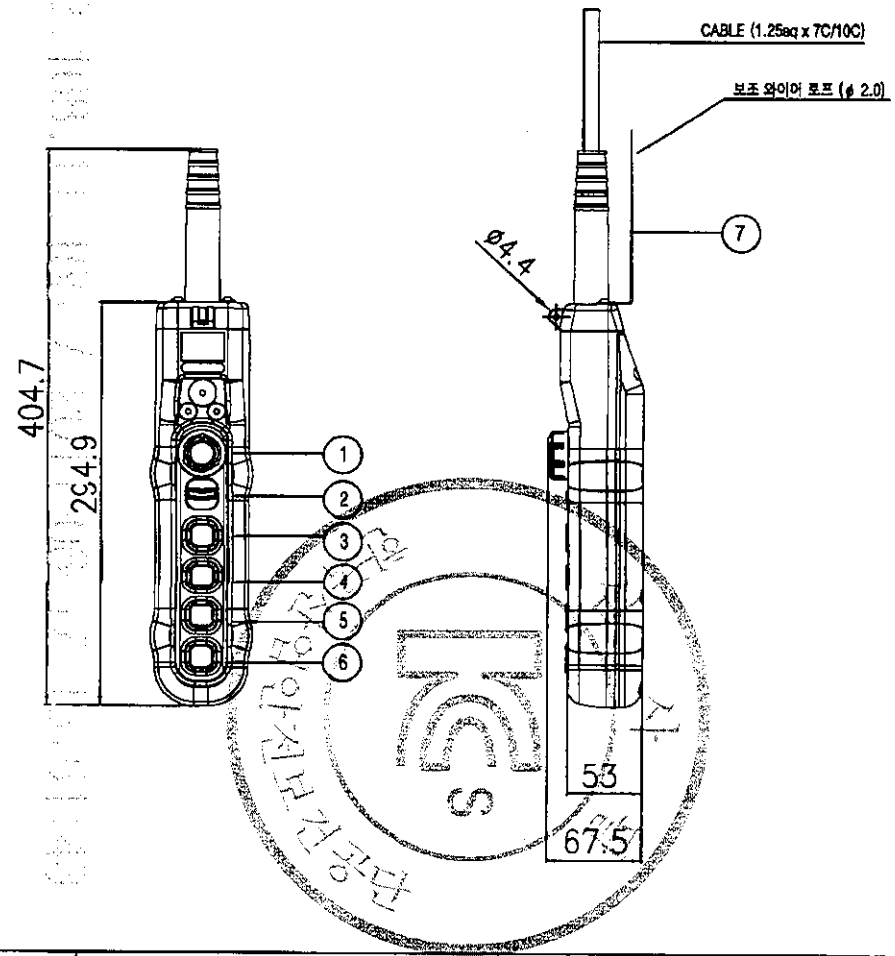

구분 / 색상	조작버튼	표시등
적색	비상	비상
황색	비정상	비정상
녹색	정상	정상
청색	의무	의무
흰색,회색-흑색	지정된의미없음	기타

* MATERIAL : POLYCARBOBATE(PLASTIC)
* BODY COLOR : YELLOW, BLACK
* IP : 55 이상

NO	SYMBOL	TYPE	SPEC.	COLOR
1	E.B.S	PUSH LOCK TURN RESET TYPE	250VAC x 6A	RED
2	SPARE			BLACK
3	상	1PUSH BUTTON 1STEP		
4	하	1PUSH BUTTON 1STEP		
5	동(전)	1PUSH BUTTON 2STEP		
6	서(후)	1PUSH BUTTON 2STEP		
7	보조 와이어	ϕ 2.0		

MK	DATE	REVISIONS	CHK.	APP.
3				
2				
1				

CUSTOMER		DRAWING	DESIGN	CHECKED	APPROVED	SCALE	DATE
DRAWING TITLE	PENDANT PUSH BUTTON SWITCH						
	LAY OUT	KD KUK DONG HOIST CO., LTD.			DWG. NO		

192.168.11.155 / 2011-06-17 15:51:43

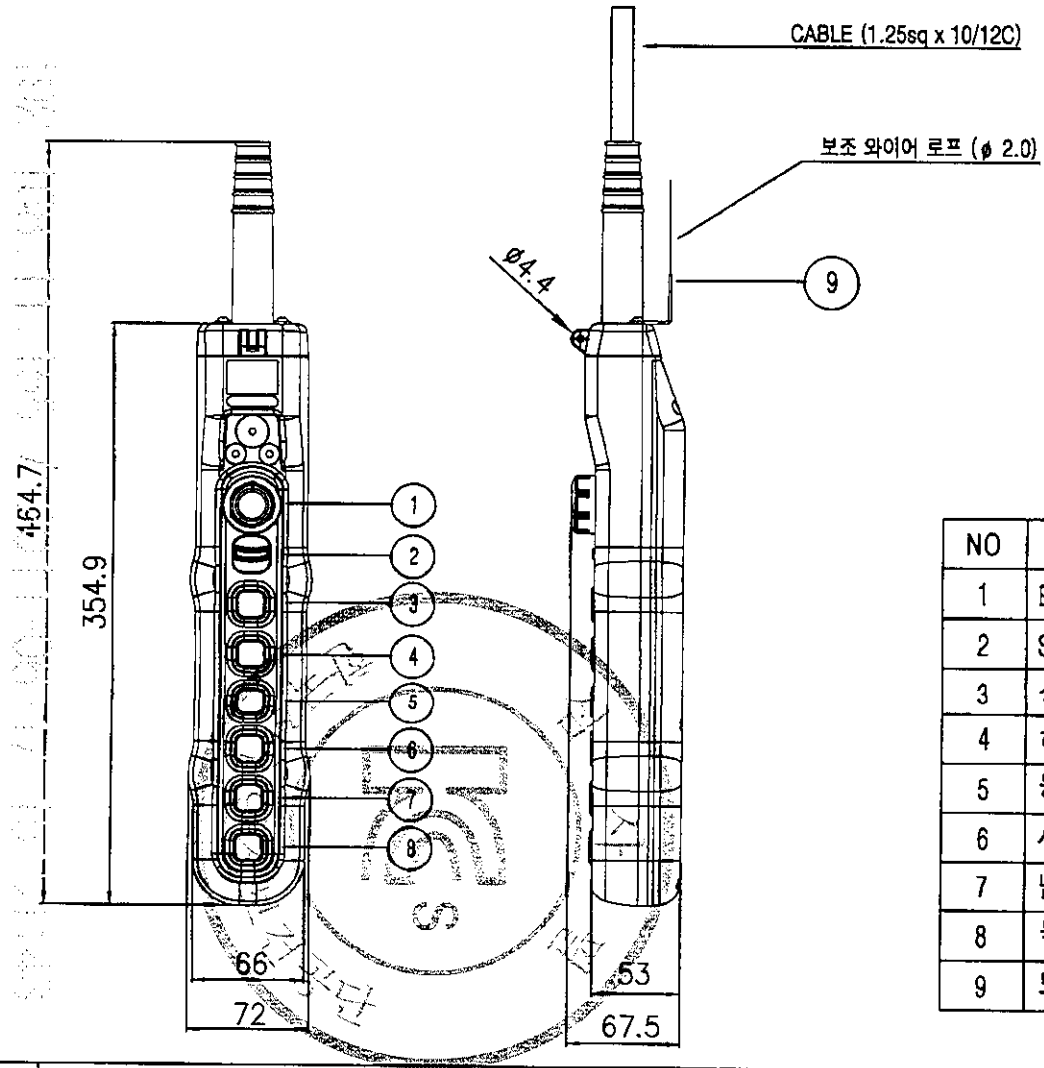

색상 \ 구분	조작버튼	표시등
적색	비상	비상
황색	비정상	비정상
녹색	정상	정상
청색	의무	의무
흰색,회색-흑색	지정된의미없음	기타

* MATERIAL : POLYCARBOBATE(PLASTIC)
* BODY COLOR : YELLOW, BLACK
* IP : 55 이상

NO	SYMBOL	TYPE	SPEC.	COLOR
1	E.B.S	PUSH LOCK TURN RESET TYPE	250VAC x 6A	RED
2	SPARE			BLACK
3	상	1PUSH BUTTON 1STEP		
4	하	1PUSH BUTTON 1STEP		
5	동 (좌)	1PUSH BUTTON 2STEP		
6	서 (우)	1PUSH BUTTON 2STEP		
7	남 (전)	1PUSH BUTTON 1STEP		
8	북 (후)	1PUSH BUTTON 1STEP		
9	보조 WIRE	ø 2.0		

MK	DATE	REVISIONS	CHK.	APP.

CUSTOMER		DRAWING	DESIGN	CHECKED	APPROVED	SCALE	DATE
DRAWING TITLE	PENDANT PUSH BUTTON SWITCH						
	LAY OUT	KD KUK DONG HOIST CO., LTD.			DWG. NO		

192.168.11.155 / 2011-06-17 15:51:43

불법복제 및 배포금지

불법복제 및 배포금지

LOAD LIMITER 권고 SETTING치

* POWER SOURCE : AC 3¢ 220V 60Hz

극동호이스트(주)

HOIST	MOTOR 용량	LOAD LIMITER 권고 SETTING치			LOAD CURRENT		C.T MODEL	연결단자 NO	C.T 용량	REMARK
		LOAD CURRENT	ADJ START TIME	SHOCK TIME	100%	110%				
0.5 TON	1.2KW x 8P	110%	1 SEC	1 SEC	8.0 A	9.0 A	CT-1	K, L	5 V.A	
	1.5KW x 6P	110%	1 SEC	1 SEC	7.6 A	8.4 A	CT-1	K, L	5 V.A	
	2.4KW x 4P	110%	1 SEC	1 SEC	10 A	11.2 A	CT-1	K, L	5 V.A	
1 TON	1.2KW x 8P	110%	1 SEC	1 SEC	8.0 A	9.0 A	CT-1	K, L	5 V.A	
	1.5KW x 6P	110%	1 SEC	1 SEC	7.6 A	8.4 A	CT-1	K, L	5 V.A	
	2.4KW x 4P	110%	1 SEC	1 SEC	10 A	11.2 A	CT-1	K, L	5 V.A	
2 TON	1.8KW x 8P	110%	1 SEC	1 SEC	11.0 A	12.2 A	CT-1	K, L	5 V.A	
	3.7KW x 4P	110%	1 SEC	1 SEC	16.0 A	17.6 A	CT-1	K, L	5 V.A	
2.8 TON	2.5KW x 8P	110%	1 SEC	1 SEC	17.7 A	19.5 A	CT-1	K, L	5 V.A	
	5.0KW x 4P	110%	1 SEC	1 SEC	22.8 A	25.0 A	CT-1	K, L	5 V.A	
3 TON	2.8KW x 8P	110%	1 SEC	1 SEC	17.7 A	19.5 A	CT-1	K, L	5 V.A	
	5.5KW x 4P	110%	1 SEC	1 SEC	22.8 A	25.0 A	CT-1	K, L	5 V.A	
5 TON	4.2KW x 8P	110%	1 SEC	1 SEC	23.0 A	25.3 A	CT-1	K, L	5 V.A	
	5.5KW x 6P	110%	1 SEC	1 SEC	28.2 A	31.0 A	CT-1	K, L	5 V.A	
	8.5KW x 4P	110%	1 SEC	1 SEC	34.4 A	38.4 A	CT-1	K, L	5 V.A	
7.5 TON	4.2KW x 8P	110%	1 SEC	1 SEC	23.0 A	25.3 A	CT-1	K, L	5 V.A	
	5.5KW x 6P	110%	1 SEC	1 SEC	28.2 A	31.0 A	CT-1	K, L	5 V.A	
	8.5KW x 4P	110%	1 SEC	1 SEC	34.4 A	38.4 A	CT-1	K, L	5 V.A	

NOTE

1. 상기 TABLE의 수치는 권고 SETTING 수치이며 MOTOR의 특성 및 현장 조건에 따라 변경 가능함.

192.168.11.155 / 2011-06-17 15:51:43

192.168.11.155 / 2011-06-17 15:51:43

불법복제 및 배포금지

LOAD LIMITER 권고 SETTING치

* POWER SOURCE : AC 3¢ 380V 60Hz

극동호이스트(주)

HOIST	MOTOR 용량	LOAD LIMITER 권고 SETTING치			LOAD CURRENT		C.T MODEL	연결단자 NO	C.T 용량	REMARK
		LOAD CURRENT	ADJ START TIME	SHOCK TIME	100%	110%				
0.5 TON	1.2KW x 8P	110%	1 SEC	1 SEC	4.6 A	5.2 A	CT-1	K, L	5 V.A	
	1.5KW x 6P	110%	1 SEC	1 SEC	5.4 A	4.9 A	CT-1	K, L	5 V.A	
	2.4KW x 4P	110%	1 SEC	1 SEC	5.6 A	6.4 A	CT-1	K, L	5 V.A	
1 TON	1.2KW x 8P	110%	1 SEC	1 SEC	4.6 A	5.2 A	CT-1	K, L	5 V.A	
	1.5KW x 6P	110%	1 SEC	1 SEC	5.4 A	4.9 A	CT-1	K, L	5 V.A	
	2.4KW x 4P	110%	1 SEC	1 SEC	5.6 A	6.4 A	CT-1	K, L	5 V.A	
2 TON	1.8KW x 8P	110%	1 SEC	1 SEC	6.4 A	7.1 A	CT-1	K, L	5 V.A	
	3.7KW x 4P	110%	1 SEC	1 SEC	9.3 A	10.3 A	CT-1	K, L	5 V.A	
2.8 TON	2.5KW x 8P	110%	1 SEC	1 SEC	10.3 A	11.4 A	CT-1	K, L	5 V.A	
	5.0KW x 4P	110%	1 SEC	1 SEC	12.2 A	13.5 A	CT-1	K, L	5 V.A	
3 TON	2.8KW x 8P	110%	1 SEC	1 SEC	10.3 A	11.4 A	CT-1	K, L	5 V.A	
	5.5KW x 4P	110%	1 SEC	1 SEC	12.2 A	13.5 A	CT-1	K, L	5 V.A	
5 TON	4.2KW x 8P	110%	1 SEC	1 SEC	13.3 A	14.6 A	CT-1	K, L	5 V.A	
	5.5KW x 6P	110%	1 SEC	1 SEC	19.9 A	23.1 A	CT-1	K, L	5 V.A	
	8.5KW x 4P	110%	1 SEC	1 SEC	16.3 A	18.0 A	CT-1	K, L	5 V.A	
7.5 TON	4.2KW x 8P	110%	1 SEC	1 SEC	13.3 A	14.6 A	CT-1	K, L	5 V.A	
	5.5KW x 6P	110%	1 SEC	1 SEC	19.9 A	23.1 A	CT-1	K, L	5 V.A	
	8.5KW x 4P	110%	1 SEC	1 SEC	16.3 A	18.0 A	CT-1	K, L	5 V.A	

NOTE

1. 상기 TABLE의 수치는 권고 SETTING 수치이며 MOTOR의 특성 및 현장 조건에 따라 변경 가능함.

LOAD LIMITER 권고 SETTING치

* POWER SOURCE : AC 3Φ 440V 60Hz

극동호이스트㈜

HOIST	MOTOR 용량	LOAD LIMITER 권고 SETTING치			LOAD CURRENT		C.T MODEL	연결단자 NO	C.T 용량	REMARK
		LOAD CURRENT	ADJ START TIME	SHOCK TIME	100%	110%				
0.5 TON	1.2KW x 8P	110%	1 SEC	1 SEC	4.0 A	4.6 A	CT-1	K, L	5 V.A	
	1.5KW x 6P	110%	1 SEC	1 SEC	3.8 A	4.5 A	CT-1	K, L	5 V.A	
	2.4KW x 4P	110%	1 SEC	1 SEC	5.0 A	5.9 A	CT-1	K, L	5 V.A	
1 TON	1.2KW x 8P	110%	1 SEC	1 SEC	4.0 A	4.6 A	CT-1	K, L	5 V.A	
	1.5KW x 6P	110%	1 SEC	1 SEC	3.8 A	4.5 A	CT-1	K, L	5 V.A	
	2.4KW x 4P	110%	1 SEC	1 SEC	5.0 A	5.9 A	CT-1	K, L	5 V.A	
2 TON	1.8KW x 8P	110%	1 SEC	1 SEC	5.5 A	6.1 A	CT-1	K, L	5 V.A	
	3.7KW x 4P	110%	1 SEC	1 SEC	8.0 A	10.8 A	CT-1	K, L	5 V.A	
2.8 TON	2.5KW x 8P	110%	1 SEC	1 SEC	8.9 A	9.8 A	CT-1	K, L	5 V.A	
	5.0KW x 4P	110%	1 SEC	1 SEC	10.5 A	11.6 A	CT-1	K, L	5 V.A	
3 TON	2.8KW x 8P	110%	1 SEC	1 SEC	8.9 A	9.8 A	CT-1	K, L	5 V.A	
	5.5KW x 4P	110%	1 SEC	1 SEC	10.5 A	11.6 A	CT-1	K, L	5 V.A	
5 TON	4.2KW x 8P	110%	1 SEC	1 SEC	11.5 A	12.7 A	CT-1	K, L	5 V.A	
	5.5KW x 6P	110%	1 SEC	1 SEC	14.1 A	15.5 A	CT-1	K, L	5 V.A	
	8.5KW x 4P	110%	1 SEC	1 SEC	16.5 A	20.5 A	CT-1	K, L	5 V.A	
7.5 TON	4.2KW x 8P	110%	1 SEC	1 SEC	11.5 A	12.7 A	CT-1	K, L	5 V.A	
	5.5KW x 6P	110%	1 SEC	1 SEC	14.1 A	15.5 A	CT-1	K, L	5 V.A	
	8.5KW x 4P	110%	1 SEC	1 SEC	16.5 A	20.5 A	CT-1	K, L	5 V.A	

NOTE

1. 상기 TABLE의 수치는 권고 SETTING 수치이며 MOTOR의 특성 및 현장 조건에 따라 변경 가능함.

불법복제 및 배포금지

192.168.11.155 / 2011-06-17 15:51:43

LOAD LIMITER 권고 SETTING치

* POWER SOURCE : AC 3 ¢ 460V 60Hz

극동호이스트(주)

HOIST	MOTOR 용량	LOAD LIMITER 권고 SETTING치			LOAD CURRENT		C.T MODEL	연결단자 NO	C.T 용량	REMARK
		LOAD CURRENT	ADJ START TIME	SHOCK TIME	100%	110%				
0.5 TON	1.2KW x 8P	110%	1 SEC	1 SEC	3.8 A	4.4 A	CT-1	K, L	5 V.A	
	1.5KW x 6P	110%	1 SEC	1 SEC	3.6 A	4.1 A	CT-1	K, L	5 V.A	
	2.4KW x 4P	110%	1 SEC	1 SEC	4.8 A	5.2 A	CT-1	K, L	5 V.A	
1 TON	1.2KW x 8P	110%	1 SEC	1 SEC	3.8 A	4.4 A	CT-1	K, L	5 V.A	
	1.5KW x 6P	110%	1 SEC	1 SEC	3.6 A	4.1 A	CT-1	K, L	5 V.A	
	2.4KW x 4P	110%	1 SEC	1 SEC	4.8 A	5.2 A	CT-1	K, L	5 V.A	
2 TON	1.8KW x 8P	110%	1 SEC	1 SEC	5.3 A	5.9 A	CT-1	K, L	5 V.A	
	3.7KW x 4P	110%	1 SEC	1 SEC	7.7 A	8.5 A	CT-1	K, L	5 V.A	
2.8T	2.5KW x 8P	110%	1 SEC	1 SEC	7.7 A	8.5 A	CT-1	K, L	5 V.A	
	5.0KW x 4P	110%	1 SEC	1 SEC	10.0 A	11.5 A	CT-1	K, L	5 V.A	
3TON	2.8KW x 8P	110%	1 SEC	1 SEC	7.7 A	8.5 A	CT-1	K, L	5 V.A	
	5.5KW x 4P	110%	1 SEC	1 SEC	10.0 A	11.5 A	CT-1	K, L	5 V.A	
5 TON	4.2KW x 8P	110%	1 SEC	1 SEC	11.0 A	12.2 A	CT-1	K, L	5 V.A	
	5.5KW x 6P	110%	1 SEC	1 SEC	13.5 A	14.7 A	CT-1	K, L	5 V.A	
	8.5KW x 4P	110%	1 SEC	1 SEC	16.5 A	20.5 A	CT-1	K, L	5 V.A	
7.5 TON	4.2KW x 8P	110%	1 SEC	1 SEC	11.0 A	12.2 A	CT-1	K, L	5 V.A	
	5.5KW x 6P	110%	1 SEC	1 SEC	13.5 A	14.7 A	CT-1	K, L	5 V.A	
	8.5KW x 4P	110%	1 SEC	1 SEC	16.5 A	20.5 A	CT-1	K, L	5 V.A	

NOTE

1. 상기 TABLE의 수치는 권고 SETTING 수치이며 MOTOR의 특성 및 현장 조건에 따라 변경 가능함.

192.168.11.155 / 2011-06-17 15:51:43

본 문서는 배포금지

LOAD LIMITER 권고 SETTING치

* POWER SOURCE : AC 3¢ 480V 60Hz

극동호이스트(주)

HOIST	MOTOR 용량	LOAD LIMITER 권고 SETTING치			LOAD CURRENT		C.T MODEL	연결단자 NO	C.T 용량	REMARK
		LOAD CURRENT	ADJ START TIME	SHOCK TIME	100%	110%				
0.5 TON	1.2KW x 8P	110%	1 SEC	1 SEC	3.6 A	4.2 A	CT-1	K, L	5 V.A	
	1.5KW x 6P	110%	1 SEC	1 SEC	3.5 A	3.9 A	CT-1	K, L	5 V.A	
	2.4KW x 4P	110%	1 SEC	1 SEC	4.6 A	5.1 A	CT-1	K, L	5 V.A	
1 TON	1.2KW x 8P	110%	1 SEC	1 SEC	3.6 A	4.2 A	CT-1	K, L	5 V.A	
	1.5KW x 6P	110%	1 SEC	1 SEC	3.5 A	3.9 A	CT-1	K, L	5 V.A	
	2.4KW x 4P	110%	1 SEC	1 SEC	4.6 A	5.1 A	CT-1	K, L	5 V.A	
2 TON	1.8KW x 8P	110%	1 SEC	1 SEC	5.1 A	5.8 A	CT-1	K, L	5 V.A	
	3.7KW x 4P	110%	1 SEC	1 SEC	7.3 A	8.2 A	CT-1	K, L	5 V.A	
2.8 TON	2.5KW x 8P	110%	1 SEC	1 SEC	7.3 A	8.2 A	CT-1	K, L	5 V.A	
	5.0KW x 4P	110%	1 SEC	1 SEC	9.6 A	11.2 A	CT-1	K, L	5 V.A	
3 TON	2.8KW x 8P	110%	1 SEC	1 SEC	7.3 A	8.2 A	CT-1	K, L	5 V.A	
	5.5KW x 4P	110%	1 SEC	1 SEC	9.6 A	11.2 A	CT-1	K, L	5 V.A	
5 TON	4.2KW x 8P	110%	1 SEC	1 SEC	10.5 A	12.0 A	CT-1	K, L	5 V.A	
	5.5KW x 6P	110%	1 SEC	1 SEC	12.9 A	14.2 A	CT-1	K, L	5 V.A	
	8.5KW x 4P	110%	1 SEC	1 SEC	15.8 A	19.9 A	CT-1	K, L	5 V.A	
7.5 TON	4.2KW x 8P	110%	1 SEC	1 SEC	10.5 A	12.0 A	CT-1	K, L	5 V.A	
	5.5KW x 6P	110%	1 SEC	1 SEC	12.9 A	14.2 A	CT-1	K, L	5 V.A	
	8.5KW x 4P	110%	1 SEC	1 SEC	15.8 A	19.9 A	CT-1	K, L	5 V.A	

NOTE

1. 상기 TABLE의 수치는 권고 SETTING 수치이며 MOTOR의 특성 및 현장 조건에 따라 변경 가능함.

192.168.11.155 / 2011-06-17 15:51:43

불법복제 및 배포금지

불법복제 및 배포금지

E.O.C.R 권고 SETTING치

* POWER SOURCE : AC 3Φ 220V 60Hz

극동호이스트(주)

HOIST	MOTOR 용량	MOTOR 정격 전류	DRIVE TYPE	E.O.C.R TYPE	권고 SETTING 치			REMARK
					DELAY TIME	OPERATION TIME	CURRENT	
0.5 TON	1.2KW x 8P	8.0 A	1 DRIVE	SS-30	3 SEC	1 SEC	8.0 A	
	1.5KW x 6P	7.6 A	1 DRIVE	SS-30	3 SEC	1 SEC	7.6 A	
	2.4KW x 4P	10.0 A	1 DRAVE	SS-30	3 SEC	1 SEC	10.0 A	
1 TON	1.2KW x 8P	8.0 A	1 DRIVE	SS-30	3 SEC	1 SEC	8.0 A	
	1.5KW x 6P	7.6 A	1 DRIVE	SS-30	3 SEC	1 SEC	7.6 A	
	2.4KW x 4P	10.0 A	1 DRAVE	SS-30	3 SEC	1 SEC	10.0 A	
2 TON	1.8KW x 8P	11.0 A	1 DRAVE	SS-30	3 SEC	1 SEC	11.0 A	
	3.7KW x 4P	16.0 A	1 DRAVE	SS-30	3 SEC	1 SEC	16.0 A	
2.8 TON	2.5KW x 8P	17.7 A	1 DRAVE	SS-30	3 SEC	1 SEC	17.7 A	
	5.0KW x 4P	22.8 A	1 DRAVE	SS-30	3 SEC	1 SEC	22.8 A	
3 TON	2.8KW x 8P	17.7 A	1 DRAVE	SS-30	3 SEC	1 SEC	17.7 A	
	5.5KW x 4P	22.8 A	1 DRAVE	SS-30	3 SEC	1 SEC	22.8 A	
5 TON	4.2KW x 8P	23.0 A	1 DRAVE	SS-30	3 SEC	1 SEC	23.0 A	
	5.5KW x 6P	28.2 A	1 DRAVE	SS-30	3 SEC	1 SEC	28.2 A	
	8.5KW x 4P	34.4 A	1 DRAVE	SS-30	3 SEC	1 SEC	34.4 A	
7.5 TON	4.2KW x 8P	23.0 A	1 DRAVE	SS-30	3 SEC	1 SEC	23.0 A	
	5.5KW x 6P	28.2 A	1 DRAVE	SS-30	3 SEC	1 SEC	28.2 A	
	8.5KW x 4P	34.4 A	1 DRAVE	SS-30	3 SEC	1 SEC	34.4 A	

NOTE

1. 상기 TABLE의 수치는 권고 SETTING 수치이며 MOTOR의 특성 및 현장 조건에 따라 변경 가능함.

192.168.11.155 / 2011-06-17 15:51:43

E.O.C.R 권고 SETTING치

* POWER SOURCE : AC 3Φ 380V 60Hz

극동호이스트(주)

HOIST	MOTOR 용량	1 정격 전류	DRIVE TYPE	E.O.C.R TYPE	권고 SETTING 치			REMARK
					DELAY TIME	OPERATION TIME	CURRENT	
0.5 TON	1.2KW x 8P	4.6 A	1 DRIVE	SS-30	3 SEC	1 SEC	4.6 A	
	1.5KW x 6P	5.4 A	1 DRIVE	SS-30	3 SEC	1 SEC	5.4 A	
	2.4KW x 4P	5.6 A	1 DRAVE	SS-30	3 SEC	1 SEC	5.6 A	
1 TON	1.2KW x 8P	4.6 A	1 DRIVE	SS-30	3 SEC	1 SEC	4.6 A	
	1.5KW x 6P	5.4 A	1 DRIVE	SS-30	3 SEC	1 SEC	5.4 A	
	2.4KW x 4P	5.6 A	1 DRAVE	SS-30	3 SEC	1 SEC	5.6 A	
2 TON	1.8KW x 8P	6.4 A	1 DRAVE	SS-30	3 SEC	1 SEC	6.4 A	
	3.7KW x 4P	9.3 A	1 DRAVE	SS-30	3 SEC	1 SEC	9.3 A	
2.8 TON	2.5KW x 8P	10.3 A	1 DRAVE	SS-30	3 SEC	1 SEC	10.3 A	
	5.0KW x 4P	12.2 A	1 DRAVE	SS-30	3 SEC	1 SEC	12.2 A	
3 TON	2.8KW x 8P	10.3 A	1 DRAVE	SS-30	3 SEC	1 SEC	10.3 A	
	5.5KW x 4P	12.2 A	1 DRAVE	SS-30	3 SEC	1 SEC	12.2 A	
5 TON	4.2KW x 8P	13.3 A	1 DRAVE	SS-30	3 SEC	1 SEC	13.3 A	
	5.5KW x 6P	16.3 A	1 DRAVE	SS-30	3 SEC	1 SEC	16.3 A	
	8.5KW x 4P	19.9 A	1 DRAVE	SS-30	3 SEC	1 SEC	19.9 A	
7.5 TON	4.2KW x 8P	13.3 A	1 DRAVE	SS-30	3 SEC	1 SEC	13.3 A	
	5.5KW x 6P	16.3 A	1 DRAVE	SS-30	3 SEC	1 SEC	16.3 A	
	8.5KW x 4P	19.9 A	1 DRAVE	SS-30	3 SEC	1 SEC	19.9 A	

NOTE

1. 상기 TABLE의 수치는 권고 SETTING 수치이며 MOTOR의 특성 및 현장 조건에 따라 변경 가능함.

불법복제 및 배포금지

192.168.11.155 / 2011-06-17 15:51:43

E.O.C.R 권고 SETTING치

* POWER SOURCE : AC 3Φ 440V 60Hz

극동호이스트(주)

HOIST	MOTOR 용량	MOTOR 정격 전류	DRIVE TYPE	E.O.C.R TYPE	권고 SETTING 치			REMARK
					DELAY TIME	OPERATION TIME	CURRENT	
0.5 TON	1.2KW x 8P	4.0 A	1 DRIVE	SS-06	3 SEC	1 SEC	4.0 A	
	1.5KW x 6P	3.8 A	1 DRIVE	SS-06	3 SEC	1 SEC	3.8 A	
	2.4KW x 4P	5.0 A	1 DRAVE	SS-30	3 SEC	1 SEC	5.0 A	
1 TON	1.2KW x 8P	4.0 A	1 DRIVE	SS-06	3 SEC	1 SEC	4.0 A	
	1.5KW x 6P	3.8 A	1 DRIVE	SS-06	3 SEC	1 SEC	3.8 A	
	2.4KW x 4P	5.0 A	1 DRAVE	SS-30	3 SEC	1 SEC	5.0 A	
2 TON	1.8KW x 8P	5.5 A	1 DRAVE	SS-30	3 SEC	1 SEC	5.5 A	
	3.7KW x 4P	8.0 A	1 DRAVE	SS-30	3 SEC	1 SEC	8.0 A	
2.8 TON	2.5KW x 8P	8.9 A	1 DRAVE	SS-30	3 SEC	1 SEC	8.9 A	
	5.0KW x 4P	10.5 A	1 DRAVE	SS-30	3 SEC	1 SEC	10.5 A	
3 TON	2.8KW x 8P	8.9 A	1 DRAVE	SS-30	3 SEC	1 SEC	8.9 A	
	5.5KW x 4P	10.5 A	1 DRAVE	SS-30	3 SEC	1 SEC	10.5 A	
5 TON	4.2KW x 8P	11.5 A	1 DRAVE	SS-30	3 SEC	1 SEC	11.5 A	
	5.5KW x 6P	14.1 A	1 DRAVE	SS-30	3 SEC	1 SEC	14.1 A	
	8.5KW x 4P	16.5 A	1 DRAVE	SS-30	3 SEC	1 SEC	16.5 A	
7.5 TON	4.2KW x 8P	11.5 A	1 DRAVE	SS-30	3 SEC	1 SEC	11.5 A	
	5.5KW x 6P	14.1 A	1 DRAVE	SS-30	3 SEC	1 SEC	14.1 A	
	8.5KW x 4P	16.5 A	1 DRAVE	SS-30	3 SEC	1 SEC	16.5 A	

NOTE

1. 상기 TABLE의 수치는 권고 SETTING 수치이며 MOTOR의 특성 및 현장 조건에 따라 변경 가능함.

불법복제 및 배포금지

192.168.11.155 / 2011-06-17 15:51:43

E.O.C.R 권고 SETTING치

* POWER SOURCE : AC 3¢ 460V 60Hz

극동호이스트(주)

HOIST	MOTOR 용량	MOTOR 정격 전류	DRIVE TYPE	E.O.C.R TYPE	권고 SETTING 치			REMARK
					DELAY TIME	OPERATION TIME	CURRENT	
0.5 TON	1.2KW x 8P	3.8 A	1 DRIVE	SS-06	3 SEC	1 SEC	3.8 A	
	1.5KW x 6P	3.6 A	1 DRIVE	SS-06	3 SEC	1 SEC	3.6 A	
	2.4KW x 4P	4.8 A	1 DRAVE	SS-06	3 SEC	1 SEC	4.8 A	
1 TON	1.8KW x 8P	5.3 A	1 DRAVE	SS-30	3 SEC	1 SEC	5.3 A	
	2.5KW x 6P	5.5 A	1 DRAVE	SS-30	3 SEC	1 SEC	5.8 A	
	3.7KW x 4P	7.7 A	1 DRAVE	SS-30	3 SEC	1 SEC	7.7 A	
2 TON	1.8KW x 8P	5.3 A	1 DRAVE	SS-30	3 SEC	1 SEC	5.3 A	
	3.7KW x 4P	7.7 A	1 DRAVE	SS-30	3 SEC	1 SEC	7.7 A	
2.5 TON	2.5KW x 8P	7.7 A	1 DRAVE	SS-30	3 SEC	1 SEC	7.7 A	
	5.0KW x 4P	10.0 A	1 DRAVE	SS-30	3 SEC	1 SEC	10.0 A	
3 TON	2.8KW x 8P	7.7 A	1 DRAVE	SS-30	3 SEC	1 SEC	7.7 A	
	5.5KW x 4P	10.0 A	1 DRAVE	SS-30	3 SEC	1 SEC	10.0 A	
5 TON	4.2KW x 8P	11.0 A	1 DRAVE	SS-30	3 SEC	1 SEC	11.0 A	
	5.5KW x 6P	13.5 A	1 DRAVE	SS-30	3 SEC	1 SEC	13.5 A	
	8.5KW x 4P	16.5 A	1 DRAVE	SS-30	3 SEC	1 SEC	16.5 A	
7.5 TON	4.2KW x 8P	11.0 A	1 DRAVE	SS-30	3 SEC	1 SEC	11.0 A	
	5.5KW x 6P	13.5 A	1 DRAVE	SS-30	3 SEC	1 SEC	13.5 A	
	8.5KW x 4P	16.5 A	1 DRAVE	SS-30	3 SEC	1 SEC	16.5 A	

NOTE

1. 상기 TABLE의 수치는 권고 SETTING 수치이며 MOTOR의 특성 및 현장 조건에 따라 변경 가능함.

불법복제 금지 배포금지

192.168.11.155 / 2011-06-17 15:51:43

192.168.11.155 / 2011-06-17 15:51:43

불법복제 및 배포금지

E.O.C.R 권고 SETTING치

* POWER SOURCE : AC 3Φ 480V 60Hz

극동호이스트(주)

HOIST	MOTOR 용량	MOTOR 정격 전류	DRIVE TYPE	E.O.C.R TYPE	권고 SETTING 치			REMARK
					DELAY TIME	OPERATION TIME	CURRENT	
0.5 TON	1.2KW x 8P	3.6 A	1 DRIVE	SS-06	3 SEC	1 SEC	3.6 A	
	1.5KW x 6P	3.5 A	1 DRIVE	SS-06	3 SEC	1 SEC	3.5 A	
	2.4KW x 4P	4.6 A	1 DRAVE	SS-06	3 SEC	1 SEC	4.6 A	
1 TON	1.2KW x 8P	3.6 A	1 DRIVE	SS-06	3 SEC	1 SEC	3.6 A	
	1.5KW x 6P	3.5 A	1 DRIVE	SS-06	3 SEC	1 SEC	3.5 A	
	2.4KW x 4P	4.6 A	1 DRAVE	SS-06	3 SEC	1 SEC	4.6 A	
2 TON	1.8KW x 8P	5.1 A	1 DRAVE	SS-30	3 SEC	1 SEC	5.1 A	
	3.7KW x 4P	7.3 A	1 DRAVE	SS-30	3 SEC	1 SEC	7.3 A	
2.8 TON	2.5KW x 8P	7.3 A	1 DRAVE	SS-30	3 SEC	1 SEC	7.3 A	
	5.0KW x 4P	9.6 A	1 DRAVE	SS-30	3 SEC	1 SEC	9.6 A	
3 TON	2.8KW x 8P	7.3 A	1 DRAVE	SS-30	3 SEC	1 SEC	7.3 A	
	5.5KW x 4P	9.6 A	1 DRAVE	SS-30	3 SEC	1 SEC	9.6 A	
5 TON	4.2KW x 8P	10.5 A	1 DRAVE	SS-30	3 SEC	1 SEC	10.5 A	
	5.5KW x 6P	12.9 A	1 DRAVE	SS-30	3 SEC	1 SEC	12.9 A	
	8.5KW x 4P	15.8 A	1 DRAVE	SS-30	3 SEC	1 SEC	15.8 A	
7.5 TON	4.2KW x 8P	10.5 A	1 DRAVE	SS-30	3 SEC	1 SEC	10.5 A	
	5.5KW x 6P	12.9 A	1 DRAVE	SS-30	3 SEC	1 SEC	12.9 A	
	8.5KW x 4P	15.8 A	1 DRAVE	SS-30	3 SEC	1 SEC	15.8 A	

NOTE

1. 상기 TABLE의 수치는 권고 SETTING 수치이며 MOTOR의 특성 및 현장 조건에 따라 변경 가능함.

불법복제 및 배포금지

THREE PHASE INDUCTION MOTOR DATE SHEET

SCHEDULE OF TECHNICAL DATA

1. SERVICE	HOISTING
2. MANUFACTURE	극동호이스트(주)
3. FRAME NUMBER	112 M
4. RATED POWER	3.7 KW x 4 P
5. RATED VOLTAGE AND FREQUENCY	220 V 60 Hz
6. MOTOR TYPE	SQUIRREL CAGE ROTOR TYPE
7. SERVICE FACTOR AND RATTING	1 . 0 , 30 MIN
8. LOCATION AND INSULATION CLASS	INDOOR, OUTDOOR, B CLASS
9. DESIGN TRMPERATURE RISE(BY RESISTANCE)	80 ℃
10. FULL LOAD SPEED	1710 RPM
11. FULL LOAD CURRENT	16 A
12. LOCKED ROTOR CURRENT	93.3 A
13. MINIMUM STARTING VOLTAGE	200 V
14. EFFICIENCY AT 100% RATED LOAD	80 %
15. POWER FACTOR AT 100% RATED LOAD	76 %
16. FULL LOAD TORQUE	4.8 KG.M
17. SITE ALTTITUDE(UNDER)	1000 M
18. ENCLOSURE & COOLING METHOD	T E N V
19. TYPE OF BEARING	PL : 6206zz OPL : 6206zz
20. MOUNTING	H O R I Z O N T A L
21. MAXIMUM AMBIENT TEMPURE	40 ℃
22. BEARING LUBRICATION	G R E A S E
23. STARTING METHOD	F U L L V O L T A G E

192.168.11.155 / 2011-06-17 15:51:43

불법복제 및 배포금지

THREE PHASE INDUCTION MOTOR DATE SHEET

SCHEDULE OF TECHNICAL DATA

1. SERVICE	HOISTING
2. MANUFACTURE	극동호이스트(주)
3. FRAME NUMBER	112 M
4. RATED POWER	3.7 KW x 4 P
5. RATED VOLTAGE AND FREQUENCY	380 V 60 Hz
6. MOTOR TYPE	SQUIRREL CAGE ROTOR TYPE
7. SERVICE FACTOR AND RATTING	1.0 , 30 MIN
8. LOCATION AND INSULATION CLASS	INDOOR, OUTDOOR, B CLASS
9. DESIGN TRMPERATURE RISE(BY RESISTANCE)	80 ℃
10. FULL LOAD SPEED	1710 RPM
11. FULL LOAD CURRENT	9.3 A
12. LOCKED ROTOR CURRENT	54 A
13. MINIMUM STARTING VOLTAGE	345 V
14. EFFICIENCY AT 100% RATED LOAD	80 %
15. POWER FACTOR AT 100% RATED LOAD	76 %
16. FULL LOAD TORQUE	4.8 KG.M
17. SITE ALTTITUDE(UNDER)	1000 M
18. ENCLOSURE & COOLING METHOD	TENV
19. TYPE OF BEARING	PL : 6206zz OPL : 6206zz
20. MOUNTING	HORIZONTAL
21. MAXIMUM AMBIENT TEMPURE	40 ℃
22. BEARING LUBRICATION	GREASE
23. STARTING METHOD	FULL VOLTAGE

192.168.11.155 / 2011-06-17 15:51:43

불법복제 및 배포금지

THREE PHASE INDUCTION MOTOR DATE SHEET

SCHEDULE OF TECHNICAL DATA

1. SERVICE	HOISTING
2. MANUFACTURE	극동호이스트(주)
3. FRAME NUMBER	112 M
4. RATED POWER	3.7 KW x 4 P
5. RATED VOLTAGE AND FREQUENCY	440 V 60 Hz
6. MOTOR TYPE	SQUIRREL CAGE ROTOR TYPE
7. SERVICE FACTOR AND RATTING	1 . 0 , 30 MIN
8. LOCATION AND INSULATION CLASS	INDOOR, OUTDOOR, B CLASS
9. DESIGN TRMPERATURE RISE(BY RESISTANCE)	80 ℃
10. FULL LOAD SPEED	1710 RPM
11. FULL LOAD CURRENT	8.0 A
12. LOCKED ROTOR CURRENT	46.6 A
13. MINIMUM STARTING VOLTAGE	400 V
14. EFFICIENCY AT 100% RATED LOAD	80 %
15. POWER FACTOR AT 100% RATED LOAD	76 %
16. FULL LOAD TORQUE	4.8 KG.M
17. SITE ALTTITUDE(UNDER)	1000 M
18. ENCLOSURE & COOLING METHOD	T E N V
19. TYPE OF BEARING	PL : 6206zz OPL : 6206zz
20. MOUNTING	H O R I Z O N T A L
21. MAXIMUM AMBIENT TEMPURE	40 ℃
22. BEARING LUBRICATION	G R E A S E
23. STARTING METHOD	F U L L V O L T A G E

192.168.11.155 / 2011-06-17 15:51:43

불법복제 및 배포금지

THREE PHASE INDUCTION MOTOR DATE SHEET

SCHEDULE OF TECHNICAL DATA

1. SERVICE	HOISTING
2. MANUFACTURE	극동호이스트(주)
3. FRAME NUMBER	112 M
4. RATED POWER	3.7 KW x 4 P
5. RATED VOLTAGE AND FREQUENCY	460 V 60 Hz
6. MOTOR TYPE	SQUIRREL CAGE ROTOR TYPE
7. SERVICE FACTOR AND RATTING	1.0 , 30 MIN
8. LOCATION AND INSULATION CLASS	INDOOR, OUTDOOR, B CLASS
9. DESIGN TRMPERATURE RISE(BY RESISTANCE)	80 ℃
10. FULL LOAD SPEED	1710 RPM
11. FULL LOAD CURRENT	7.7 A
12. LOCKED ROTOR CURRENT	44.7 A
13. MINIMUM STARTING VOLTAGE	418 V
14. EFFICIENCY AT 100% RATED LOAD	80 %
15. POWER FACTOR AT 100% RATED LOAD	76 %
16. FULL LOAD TORQUE	4.8 KG.M
17. SITE ALTTITUDE(UNDER)	1000 M
18. ENCLOSURE & COOLING METHOD	TENV
19. TYPE OF BEARING	PL : 6206zz OPL : 6206zz
20. MOUNTING	HORIZONTAL
21. MAXIMUM AMBIENT TEMPURE	40 ℃
22. BEARING LUBRICATION	GREASE
23. STARTING METHOD	FULL VOLTAGE

192.168.11.155 / 2011-06-17 15:51:43

불법복제 및 배포금지

THREE PHASE INDUCTION MOTOR DATE SHEET

SCHEDULE OF TECHNICAL DATA

1. SERVICE	HOISTING
2. MANUFACTURE	극동호이스트(주)
3. FRAME NUMBER	112 M
4. RATED POWER	3.7 KW x 4 P
5. RATED VOLTAGE AND FREQUENCY	480 V 60 Hz
6. MOTOR TYPE	SQUIRREL CAGE ROTOR TYPE
7. SERVICE FACTOR AND RATTING	1.0 , 30 MIN
8. LOCATION AND INSULATION CLASS	INDOOR, OUTDOOR, B CLASS
9. DESIGN TRMPERATURE RISE(BY RESISTANCE)	80 ℃
10. FULL LOAD SPEED	1710 RPM
11. FULL LOAD CURRENT	7.3 A
12. LOCKED ROTOR CURRENT	42.8 A
13. MINIMUM STARTING VOLTAGE	436 V
14. EFFICIENCY AT 100% RATED LOAD	80 %
15. POWER FACTOR AT 100% RATED LOAD	76 %
16. FULL LOAD TORQUE	4.8 KG.M
17. SITE ALTTITUDE(UNDER)	1000 M
18. ENCLOSURE & COOLING METHOD	TENV
19. TYPE OF BEARING	PL : 6206zz OPL : 6206zz
20. MOUNTING	HORIZONTAL
21. MAXIMUM AMBIENT TEMPURE	40 ℃
22. BEARING LUBRICATION	GREASE
23. STARTING METHOD	FULL VOLTAGE

192.168.11.155 / 2011-06-17 15:51:43

불법복제 및 배포금지

THREE PHASE INDUCTION MOTOR DATE SHEET

SCHEDULE OF TECHNICAL DATA

1. SERVICE	HOISTING
2. MANUFACTURE	극동호이스트(주)
3. FRAME NUMBER	112 M
4. RATED POWER	1.8 KW x 8 P
5. RATED VOLTAGE AND FREQUENCY	220 V 60 Hz
6. MOTOR TYPE	SQUIRREL CAGE ROTOR TYPE
7. SERVICE FACTOR AND RATTING	1 . 0 , 30 MIN
8. LOCATION AND INSULATION CLASS	INDOOR, OUTDOOR, B CLASS
9. DESIGN TRMPERATURE RISE(BY RESISTANCE)	80 ℃
10. FULL LOAD SPEED	855 RPM
11. FULL LOAD CURRENT	11 A
12. LOCKED ROTOR CURRENT	55 A
13. MINIMUM STARTING VOLTAGE	200 V
14. EFFICIENCY AT 100% RATED LOAD	71.5 %
15. POWER FACTOR AT 100% RATED LOAD	60 %
16. FULL LOAD TORQUE	6.93 KG.M
17. SITE ALTTITUDE(UNDER)	1000 M
18. ENCLOSURE & COOLING METHOD	T E N V
19. TYPE OF BEARING	PL : 6206zz OPL : 6206zz
20. MOUNTING	H O R I Z O N T A L
21. MAXIMUM AMBIENT TEMPURE	40 ℃
22. BEARING LUBRICATION	G R E A S E
23. STARTING METHOD	F U L L V O L T A G E

192.168.11.155 / 2011-06-17 15:51:43

불법복제 및 배포금지

THREE PHASE INDUCTION MOTOR DATE SHEET

SCHEDULE OF TECHNICAL DATA

1. SERVICE	HOISTING
2. MANUFACTURE	극동호이스트(주)
3. FRAME NUMBER	112 M
4. RATED POWER	1.8 KW x 8 P
5. RATED VOLTAGE AND FREQUENCY	380 V 60 Hz
6. MOTOR TYPE	SQUIRREL CAGE ROTOR TYPE
7. SERVICE FACTOR AND RATTING	1 . 0 , 30 MIN
8. LOCATION AND INSULATION CLASS	INDOOR, OUTDOOR, B CLASS
9. DESIGN TRMPERATURE RISE(BY RESISTANCE)	80 ℃
10. FULL LOAD SPEED	855 RPM
11. FULL LOAD CURRENT	6.4 A
12. LOCKED ROTOR CURRENT	31.9 A
13. MINIMUM STARTING VOLTAGE	345 V
14. EFFICIENCY AT 100% RATED LOAD	71.5 %
15. POWER FACTOR AT 100% RATED LOAD	60 %
16. FULL LOAD TORQUE	6.93 KG.M
17. SITE ALTTITUDE(UNDER)	1000 M
18. ENCLOSURE & COOLING METHOD	T E N V
19. TYPE OF BEARING	PL : 6206zz OPL : 6206zz
20. MOUNTING	H O R I Z O N T A L
21. MAXIMUM AMBIENT TEMPURE	40 ℃
22. BEARING LUBRICATION	G R E A S E
23. STARTING METHOD	F U L L V O L T A G E

192.168.11.155 / 2011-06-17 15:51:43

불법복제 및 배포금지

THREE PHASE INDUCTION MOTOR DATE SHEET

SCHEDULE OF TECHNICAL DATA

1. SERVICE	HOISTING
2. MANUFACTURE	극동호이스트(주)
3. FRAME NUMBER	112 M
4. RATED POWER	1.8 KW x 8 P
5. RATED VOLTAGE AND FREQUENCY	440 V 60 Hz
6. MOTOR TYPE	SQUIRREL CAGE ROTOR TYPE
7. SERVICE FACTOR AND RATTING	1.0 , 30 MIN
8. LOCATION AND INSULATION CLASS	INDOOR, OUTDOOR, B CLASS
9. DESIGN TRMPERATURE RISE(BY RESISTANCE)	80 ℃
10. FULL LOAD SPEED	855 RPM
11. FULL LOAD CURRENT	5.5 A
12. LOCKED ROTOR CURRENT	27.5 A
13. MINIMUM STARTING VOLTAGE	400 V
14. EFFICIENCY AT 100% RATED LOAD	71.5 %
15. POWER FACTOR AT 100% RATED LOAD	60 %
16. FULL LOAD TORQUE	6.93 KGM
17. SITE ALTTITUDE(UNDER)	1000 M
18. ENCLOSURE & COOLING METHOD	TENV
19. TYPE OF BEARING	PL : 6206zz OPL : 6206zz
20. MOUNTING	HORIZONTAL
21. MAXIMUM AMBIENT TEMPURE	40 ℃
22. BEARING LUBRICATION	GREASE
23. STARTING METHOD	FULL VOLTAGE

192.168.11.155 / 2011-06-17 15:51:43

불법복제 및 배포금지

THREE PHASE INDUCTION MOTOR DATE SHEET

SCHEDULE OF TECHNICAL DATA

1. SERVICE	HOISTING
2. MANUFACTURE	극동호이스트(주)
3. FRAME NUMBER	112 M
4. RATED POWER	1.8 KW x 8 P
5. RATED VOLTAGE AND FREQUENCY	460 V 60 Hz
6. MOTOR TYPE	SQUIRREL CAGE ROTOR TYPE
7. SERVICE FACTOR AND RATTING	1.0 , 30 MIN
8. LOCATION AND INSULATION CLASS	INDOOR, OUTDOOR, B CLASS
9. DESIGN TRMPERATURE RISE(BY RESISTANCE)	80 ℃
10. FULL LOAD SPEED	855 RPM
11. FULL LOAD CURRENT	5.3 A
12. LOCKED ROTOR CURRENT	26.4 A
13. MINIMUM STARTING VOLTAGE	418 V
14. EFFICIENCY AT 100% RATED LOAD	71.5 %
15. POWER FACTOR AT 100% RATED LOAD	60 %
16. FULL LOAD TORQUE	6.93 KG.M
17. SITE ALTTITUDE(UNDER)	1000 M
18. ENCLOSURE & COOLING METHOD	T E N V
19. TYPE OF BEARING	PL : 6206zz OPL : 6206zz
20. MOUNTING	H O R I Z O N T A L
21. MAXIMUM AMBIENT TEMPURE	40 ℃
22. BEARING LUBRICATION	G R E A S E
23. STARTING METHOD	F U L L V O L T A G E

192.168.11.155 / 2011-06-17 15:51:43

불법복제 및 배포금지

THREE PHASE INDUCTION MOTOR DATE SHEET

SCHEDULE OF TECHNICAL DATA

1. SERVICE	HOISTING
2. MANUFACTURE	극동호이스트(주)
3. FRAME NUMBER	112 M
4. RATED POWER	1.8 KW x 8 P
5. RATED VOLTAGE AND FREQUENCY	480 V 60 Hz
6. MOTOR TYPE	SQUIRREL CAGE ROTOR TYPE
7. SERVICE FACTOR AND RATTING	1 . 0 , 30 MIN
8. LOCATION AND INSULATION CLASS	INDOOR, OUTDOOR, B CLASS
9. DESIGN TRMPERATURE RISE(BY RESISTANCE)	80 ℃
10. FULL LOAD SPEED	855 RPM
11. FULL LOAD CURRENT	5.1 A
12. LOCKED ROTOR CURRENT	25.3 A
13. MINIMUM STARTING VOLTAGE	436 V
14. EFFICIENCY AT 100% RATED LOAD	71.5 %
15. POWER FACTOR AT 100% RATED LOAD	60 %
16. FULL LOAD TORQUE	6.93 KG.M
17. SITE ALTTITUDE(UNDER)	1000 M
18. ENCLOSURE & COOLING METHOD	T E N V
19. TYPE OF BEARING	PL : 6206zz OPL : 6206zz
20. MOUNTING	H O R I Z O N T A L
21. MAXIMUM AMBIENT TEMPURE	40 ℃
22. BEARING LUBRICATION	G R E A S E
23. STARTING METHOD	F U L L V O L T A G E

192.168.11.155 / 2011-06-17 15:51:43

불법복제 및 배포금지

THREE PHASE INDUCTION MOTOR DATE SHEET

SCHEDULE OF TECHNICAL DATA

1. SERVICE	TRAVERSING
2. MANUFACTURE	극동호이스트(주)
3. FRAME NUMBER	90 S
4. RATED POWER	0.75 KW x 4 P
5. RATED VOLTAGE AND FREQUENCY	220 V 60 Hz
6. MOTOR TYPE	SQUIRREL CAGE ROTOR TYPE
7. SERVICE FACTOR AND RATTING	1.0 , 30 MIN
8. LOCATION AND INSULATION CLASS	INDOOR, OUTDOOR, B CLASS
9. DESIGN TRMPERATURE RISE(BY RESISTANCE)	80 ℃
10. FULL LOAD SPEED	1764 RPM
11. FULL LOAD CURRENT	4.1 A
12. LOCKED ROTOR CURRENT	22.1 A
13. MINIMUM STARTING VOLTAGE	200 V
14. EFFICIENCY AT 100% RATED LOAD	66 %
15. POWER FACTOR AT 100% RATED LOAD	73.5 %
16. FULL LOAD TORQUE	1.02 KG.M
17. SITE ALTTITUDE(UNDER)	1000 M
18. ENCLOSURE & COOLING METHOD	T.E.N.V
19. TYPE OF BEARING	PL : 6205zz OPL : 6204zz
20. MOUNTING	HORIZONTAL
21. MAXIMUM AMBIENT TEMPURE	40 ℃
22. BEARING LUBRICATION	GREASE
23. STARTING METHOD	FULL VOLTAGE

192.168.11.155 / 2011-06-17 15:51:43

불법복제 및 배포금지

THREE PHASE INDUCTION MOTOR DATE SHEET

SCHEDULE OF TECHNICAL DATA

1.SERVICE	TRAVERSING
2. MANUFACTURE	극동호이스트(주)
3. FRAME NUMBER	90 S
4. RATED POWER	0.75 KW x 4 P
5. RATED VOLTAGE AND FREQUENCY	380 V 60 Hz
6. MOTOR TYPE	SQUIRREL CAGE ROTOR TYPE
7. SERVICE FACTOR AND RATTING	1.0 , 30 MIN
8. LOCATION AND INSULATION CLASS	INDOOR, OUTDOOR, B CLASS
9. DESIGN TRMPERATURE RISE(BY RESISTANCE)	80 ℃
10. FULL LOAD SPEED	1764 RPM
11. FULL LOAD CURRENT	2.4 A
12. LOCKED ROTOR CURRENT	12.8 A
13. MINIMUM STARTING VOLTAGE	345 V
14. EFFICIENCY AT 100% RATED LOAD	66 %
15. POWER FACTOR AT 100% RATED LOAD	73.5 %
16. FULL LOAD TORQUE	1.02 KG.M
17. SITE ALTTITUDE(UNDER)	1000 M
18. ENCLOSURE & COOLING METHOD	T E N V
19. TYPE OF BEARING	PL : 6205zz OPL : 6204zz
20. MOUNTING	H O R I Z O N T A L
21. MAXIMUM AMBIENT TEMPURE	40 ℃
22. BEARING LUBRICATION	G R E A S E
23. STARTING METHOD	F U L L V O L T A G E

192.168.11.155 / 2011-06-17 15:51:43

불법복제 및 배포금지

THREE PHASE INDUCTION MOTOR DATE SHEET

SCHEDULE OF TECHNICAL DATA

1. SERVICE	TRAVERSING
2. MANUFACTURE	극동호이스트(주)
3. FRAME NUMBER	90 S
4. RATED POWER	0.75 KW x 4 P
5. RATED VOLTAGE AND FREQUENCY	440 V 60 Hz
6. MOTOR TYPE	SQUIRREL CAGE ROTOR TYPE
7. SERVICE FACTOR AND RATTING	1 . 0 , 30 MIN
8. LOCATION AND INSULATION CLASS	INDOOR, OUTDOOR, B CLASS
9. DESIGN TRMPERATURE RISE(BY RESISTANCE)	80 ℃
10. FULL LOAD SPEED	1764 RPM
11. FULL LOAD CURRENT	2.0 A
12. LOCKED ROTOR CURRENT	11.1 A
13. MINIMUM STARTING VOLTAGE	400 V
14. EFFICIENCY AT 100% RATED LOAD	66 %
15. POWER FACTOR AT 100% RATED LOAD	73.5 %
16. FULL LOAD TORQUE	1.02 KG.M
17. SITE ALTTITUDE(UNDER)	1000 M
18. ENCLOSURE & COOLING METHOD	T E N V
19. TYPE OF BEARING	PL : 6205zz OPL : 6204zz
20. MOUNTING	H O R I Z O N T A L
21. MAXIMUM AMBIENT TEMPURE	40 ℃
22. BEARING LUBRICATION	G R E A S E
23. STARTING METHOD	F U L L V O L T A G E

192.168.11.155 / 2011-06-17 15:51:43

불법복제 및 배포금지

THREE PHASE INDUCTION MOTOR DATE SHEET

SCHEDULE OF TECHNICAL DATA

1. SERVICE	TRAVERSING
2. MANUFACTURE	극동호이스트(주)
3. FRAME NUMBER	90 S
4. RATED POWER	0.75 KW x 4 P
5. RATED VOLTAGE AND FREQUENCY	460 V 60 Hz
6. MOTOR TYPE	SQUIRREL CAGE ROTOR TYPE
7. SERVICE FACTOR AND RATTING	1.0 , 30 MIN
8. LOCATION AND INSULATION CLASS	INDOOR, OUTDOOR, B CLASS
9. DESIGN TRMPERATURE RISE(BY RESISTANCE)	80 ℃
10. FULL LOAD SPEED	1764 RPM
11. FULL LOAD CURRENT	2.0 A
12. LOCKED ROTOR CURRENT	10.6 A
13. MINIMUM STARTING VOLTAGE	418 V
14. EFFICIENCY AT 100% RATED LOAD	66 %
15. POWER FACTOR AT 100% RATED LOAD	73.5 %
16. FULL LOAD TORQUE	1.02 KG.M
17. SITE ALTTITUDE(UNDER)	1000 M
18. ENCLOSURE & COOLING METHOD	T E N V
19. TYPE OF BEARING	PL : 6205zz OPL : 6204zz
20. MOUNTING	HORIZONTAL
21. MAXIMUM AMBIENT TEMPURE	40 ℃
22. BEARING LUBRICATION	GREASE
23. STARTING METHOD	FULL VOLTAGE

192.168.11.155 / 2011-06-17 15:51:43

불법복제 및 배포금지

THREE PHASE INDUCTION MOTOR DATE SHEET

SCHEDULE OF TECHNICAL DATA

1. SERVICE	TRAVERSING
2. MANUFACTURE	극동호이스트(주)
3. FRAME NUMBER	90 S
4. RATED POWER	0.75 KW x 4 P
5. RATED VOLTAGE AND FREQUENCY	480 V 60 Hz
6. MOTOR TYPE	SQUIRREL CAGE ROTOR TYPE
7. SERVICE FACTOR AND RATTING	1.0 , 30 MIN
8. LOCATION AND INSULATION CLASS	INDOOR, OUTDOOR, B CLASS
9. DESIGN TRMPERATURE RISE(BY RESISTANCE)	80 ℃
10. FULL LOAD SPEED	1764 RPM
11. FULL LOAD CURRENT	1.9 A
12. LOCKED ROTOR CURRENT	10.2 A
13. MINIMUM STARTING VOLTAGE	436 V
14. EFFICIENCY AT 100% RATED LOAD	66 %
15. POWER FACTOR AT 100% RATED LOAD	73.5 %
16. FULL LOAD TORQUE	1.02 KG.M
17. SITE ALTTITUDE(UNDER)	1000 M
18. ENCLOSURE & COOLING METHOD	T E N V
19. TYPE OF BEARING	PL : 6205zz OPL : 6204zz
20. MOUNTING	H O R I Z O N T A L
21. MAXIMUM AMBENT TEMPURE	40 ℃
22. BEARING LUBRICATION	G R E A S E
23. STARTING METHOD	F U L L V O L T A G E

192.168.11.155 / 2011-06-17 15:51:43

불법복제 및 배포금지

THREE PHASE INDUCTION MOTOR DATE SHEET

SCHEDULE OF TECHNICAL DATA

1. SERVICE	TRAVERSING
2. MANUFACTURE	극동호이스트(주)
3. FRAME NUMBER	90 S
4. RATED POWER	0.5 KW x 6 P
5. RATED VOLTAGE AND FREQUENCY	220 V 60 Hz
6. MOTOR TYPE	SQUIRREL CAGE ROTOR TYPE
7. SERVICE FACTOR AND RATTING	1.0 , 30 MIN
8. LOCATION AND INSULATION CLASS	INDOOR, OUTDOOR, B CLASS
9. DESIGN TRMPERATURE RISE(BY RESISTANCE)	80 ℃
10. FULL LOAD SPEED	1176 RPM
11. FULL LOAD CURRENT	3.2 A
12. LOCKED ROTOR CURRENT	16.4 A
13. MINIMUM STARTING VOLTAGE	200 V
14. EFFICIENCY AT 100% RATED LOAD	64 %
15. POWER FACTOR AT 100% RATED LOAD	59.5 %
16. FULL LOAD TORQUE	0.80 KG.M
17. SITE ALTTITUDE(UNDER)	1000 M
18. ENCLOSURE & COOLING METHOD	T E N V
19. TYPE OF BEARING	PL : 6205zz OPL : 6204zz
20. MOUNTING	H O R I Z O N T A L
21. MAXIMUM AMBIENT TEMPURE	40 ℃
22. BEARING LUBRICATION	G R E A S E
23. STARTING METHOD	F U L L V O L T A G E

192.168.11.155 / 2011-06-17 15:51:43

불법복제 및 배포금지

THREE PHASE INDUCTION MOTOR DATE SHEET

SCHEDULE OF TECHNICAL DATA

1. SERVICE	TRAVERSING
2. MANUFACTURE	극동호이스트(주)
3. FRAME NUMBER	90 S
4. RATED POWER	0.5 KW x 6 P
5. RATED VOLTAGE AND FREQUENCY	380 V 60 Hz
6. MOTOR TYPE	SQUIRREL CAGE ROTOR TYPE
7. SERVICE FACTOR AND RATTING	1.0 , 30 MIN
8. LOCATION AND INSULATION CLASS	INDOOR, OUTDOOR, B CLASS
9. DESIGN TRMPERATURE RISE(BY RESISTANCE)	80 ℃
10. FULL LOAD SPEED	1176 RPM
11. FULL LOAD CURRENT	2.0 A
12. LOCKED ROTOR CURRENT	9.5 A
13. MINIMUM STARTING VOLTAGE	345 V
14. EFFICIENCY AT 100% RATED LOAD	64 %
15. POWER FACTOR AT 100% RATED LOAD	59.5 %
16. FULL LOAD TORQUE	0.80 KG.M
17. SITE ALTTITUDE(UNDER)	1000 M
18. ENCLOSURE & COOLING METHOD	T E N V
19. TYPE OF BEARING	PL : 6205zz OPL : 6204zz
20. MOUNTING	H O R I Z O N T A L
21. MAXIMUM AMBIENT TEMPURE	40 ℃
22. BEARING LUBRICATION	G R E A S E
23. STARTING METHOD	F U L L V O L T A G E

192.168.11.155 / 2011-06-17 15:51:43

불법복제 및 배포금지

THREE PHASE INDUCTION MOTOR DATE SHEET

SCHEDULE OF TECHNICAL DATA

1. SERVICE	TRAVERSING
2. MANUFACTURE	극동호이스트(주)
3. FRAME NUMBER	90 S
4. RATED POWER	0.5 KW x 6 P
5. RATED VOLTAGE AND FREQUENCY	440 V 60 Hz
6. MOTOR TYPE	SQUIRREL CAGE ROTOR TYPE
7. SERVICE FACTOR AND RATTING	1.0 , 30 MIN
8. LOCATION AND INSULATION CLASS	INDOOR, OUTDOOR, B CLASS
9. DESIGN TRMPERATURE RISE(BY RESISTANCE)	80 ℃
10. FULL LOAD SPEED	1176 RPM
11. FULL LOAD CURRENT	1.7 A
12. LOCKED ROTOR CURRENT	8.2 A
13. MINIMUM STARTING VOLTAGE	400 V
14. EFFICIENCY AT 100% RATED LOAD	64 %
15. POWER FACTOR AT 100% RATED LOAD	59.5 %
16. FULL LOAD TORQUE	0.80 KG.M
17. SITE ALTTITUDE(UNDER)	1000 M
18. ENCLOSURE & COOLING METHOD	T E N V
19. TYPE OF BEARING	PL : 6205zz OPL : 6204zz
20. MOUNTING	H O R I Z O N T A L
21. MAXIMUM AMBIENT TEMPURE	40 ℃
22. BEARING LUBRICATION	G R E A S E
23. STARTING METHOD	F U L L V O L T A G E

192.168.11.155 / 2011-06-17 15:51:43

불법복제 및 배포금지

THREE PHASE INDUCTION MOTOR DATE SHEET

SCHEDULE OF TECHNICAL DATA

1. SERVICE	TRAVERSING
2. MANUFACTURE	극동호이스트(주)
3. FRAME NUMBER	90 S
4. RATED POWER	0.5 KW x 6 P
5. RATED VOLTAGE AND FREQUENCY	460 V 60 Hz
6. MOTOR TYPE	SQUIRREL CAGE ROTOR TYPE
7. SERVICE FACTOR AND RATTING	1.0 , 30 MIN
8. LOCATION AND INSULATION CLASS	INDOOR, OUTDOOR, B CLASS
9. DESIGN TRMPERATURE RISE(BY RESISTANCE)	80 ℃
10. FULL LOAD SPEED	1176 RPM
11. FULL LOAD CURRENT	1.7 A
12. LOCKED ROTOR CURRENT	7.9 A
13. MINIMUM STARTING VOLTAGE	418 V
14. EFFICIENCY AT 100% RATED LOAD	64 %
15. POWER FACTOR AT 100% RATED LOAD	59.5 %
16. FULL LOAD TORQUE	0.80 KG.M
17. SITE ALTTITUDE(UNDER)	1000 M
18. ENCLOSURE & COOLING METHOD	T E N V
19. TYPE OF BEARING	FL : 6205zz OPL : 6204zz
20. MOUNTING	H O R I Z O N T A L
21. MAXIMUM AMBIENT TEMPURE	40 ℃
22. BEARING LUBRICATION	G R E A S E
23. STARTING METHOD	F U L L V O L T A G E

192.168.11.155 / 2011-06-17 15:51:43

불법복제 및 배포금지

THREE PHASE INDUCTION MOTOR DATE SHEET

SCHEDULE OF TECHNICAL DATA

1. SERVICE	TRAVERSING
2. MANUFACTURE	극동호이스트(주)
3. FRAME NUMBER	90 S
4. RATED POWER	0.5 KW x 6 P
5. RATED VOLTAGE AND FREQUENCY	480 V 60 Hz
6. MOTOR TYPE	SQUIRREL CAGE ROTOR TYPE
7. SERVICE FACTOR AND RATTING	1.0 , 30 MIN
8. LOCATION AND INSULATION CLASS	INDOOR, OUTDOOR, B CLASS
9. DESIGN TRMPERATURE RISE(BY RESISTANCE)	80 ℃
10. FULL LOAD SPEED	1176 RPM
11. FULL LOAD CURRENT	1.6 A
12. LOCKED ROTOR CURRENT	7.5 A
13. MINIMUM STARTING VOLTAGE	436 V
14. EFFICIENCY AT 100% RATED LOAD	64 %
15. POWER FACTOR AT 100% RATED LOAD	59.5 %
16. FULL LOAD TORQUE	0.80 KG.M
17. SITE ALTTITUDE(UNDER)	1000 M
18. ENCLOSURE & COOLING METHOD	T.E.N.V
19. TYPE OF BEARING	PL : 6205zz OPL : 6204zz
20. MOUNTING	HORIZONTAL
21. MAXIMUM AMBIENT TEMPURE	40 ℃
22. BEARING LUBRICATION	GREASE
23. STARTING METHOD	FULL VOLTAGE

192.168.11.155 / 2011-06-17 15:51:43

불법복제 및 배포금지

THREE PHASE INDUCTION MOTOR DATE SHEET

SCHEDULE OF TECHNICAL DATA

1. SERVICE	TRAVERSING
2. MANUFACTURE	극동호이스트(주)
3. FRAME NUMBER	90 M
4. RATED POWER	0.8/0.4 KW x 4/8 P
5. RATED VOLTAGE AND FREQUENCY	220 V 60 Hz
6. MOTOR TYPE	SQUIRREL CAGE ROTOR TYPE
7. SERVICE FACTOR AND RATTING	1 . 0 , 30 MIN
8. LOCATION AND INSULATION CLASS	INDOOR, OUTDOOR, B CLASS
9. DESIGN TRMPERATURE RISE(BY RESISTANCE)	80 ℃
10. FULL LOAD SPEED	1750 / 850 RPM
11. FULL LOAD CURRENT	4.8/4.25 A
12. LOCKED ROTOR CURRENT	14.2/13.6 A
13. MINIMUM STARTING VOLTAGE	200 V
14. EFFICIENCY AT 100% RATED LOAD	72.8/65.8 %
15. POWER FACTOR AT 100% RATED LOAD	82.3/75 %
16. FULL LOAD TORQUE	0.80 KG.M
17. SITE ALTTITUDE(UNDER)	1000 M
18. ENCLOSURE & COOLING METHOD	T.E.N.V
19. TYPE OF BEARING	PL : 6205zz OPL : 6204zz
20. MOUNTING	HORIZONTAL
21. MAXMUM AMBIENT TEMPURE	40 ℃
22. BEARING LUBRICATION	GREASE
23. STARTING METHOD	FULL VOLTAGE

192.168.11.155 / 2011-06-17 15:51:43

불법복제 및 배포금지

THREE PHASE INDUCTION MOTOR DATE SHEET

SCHEDULE OF TECHNICAL DATA

1. SERVICE	TRAVERSING
2. MANUFACTURE	극동호이스트(주)
3. FRAME NUMBER	90 M
4. RATED POWER	0.8/0.4 KW x 4/8 P
5. RATED VOLTAGE AND FREQUENCY	380 V 60 Hz
6. MOTOR TYPE	SQUIRREL CAGE ROTOR TYPE
7. SERVICE FACTOR AND RATTING	1 . 0 , 30 MIN
8. LOCATION AND INSULATION CLASS	INDOOR, OUTDOOR, B CLASS
9. DESIGN TRMPERATURE RISE(BY RESISTANCE)	80 ℃
10. FULL LOAD SPEED	1750 / 850 RPM
11. FULL LOAD CURRENT	2.78/2.63 A
12. LOCKED ROTOR CURRENT	9.2/6.3 A
13. MINIMUM STARTING VOLTAGE	345 V
14. EFFICIENCY AT 100% RATED LOAD	72.8/65.8 %
15. POWER FACTOR AT 100% RATED LOAD	82.3/75 %
16. FULL LOAD TORQUE	0.80 KG.M
17. SITE ALTTITUDE(UNDER)	1000 M
18. ENCLOSURE & COOLING METHOD	T E N V
19. TYPE OF BEARING	PL : 6205zz OPL : 6204zz
20. MOUNTING	H O R I Z O N T A L
21. MAXIMUM AMBIENT TEMPURE	40 ℃
22. BEARING LUBRICATION	G R E A S E
23. STARTING METHOD	F U L L V O L T A G E

192.168.11.155 / 2011-06-17 15:51:43

불법복제 및 배포금지

THREE PHASE INDUCTION MOTOR DATE SHEET

SCHEDULE OF TECHNICAL DATA

1. SERVICE	TRAVERSING
2. MANUFACTURE	극동호이스트(주)
3. FRAME NUMBER	90 M
4. RATED POWER	0.8/0.4 KW x 4/8 P
5. RATED VOLTAGE AND FREQUENCY	440 V 60 Hz
6. MOTOR TYPE	SQUIRREL CAGE ROTOR TYPE
7. SERVICE FACTOR AND RATTING	1.0 , 30 MIN
8. LOCATION AND INSULATION CLASS	INDOOR, OUTDOOR, B CLASS
9. DESIGN TRMPERATURE RISE(BY RESISTANCE)	80 ℃
10. FULL LOAD SPEED	1750 / 850 RPM
11. FULL LOAD CURRENT	2.4/2.27 A
12. LOCKED ROTOR CURRENT	8.6/6.21 A
13. MINIMUM STARTING VOLTAGE	400 V
14. EFFICIENCY AT 100% RATED LOAD	72.8/65.8 %
15. POWER FACTOR AT 100% RATED LOAD	82.3/75 %
16. FULL LOAD TORQUE	0.80 KG.M
17. SITE ALTTITUDE(UNDER)	1000 M
18. ENCLOSURE & COOLING METHOD	T E N V
19. TYPE OF BEARING	PL : 6205zz OPL : 6204zz
20. MOUNTING	H O R I Z O N T A L
21. MAXIMUM AMBIENT TEMPURE	40 ℃
22. BEARING LUBRICATION	G R E A S E
23. STARTING METHOD	F U L L V O L T A G E

192.168.11.155 / 2011-06-17 15:51:43

불법복제 및 배포금지

THREE PHASE INDUCTION MOTOR DATE SHEET

SCHEDULE OF TECHNICAL DATA

1. SERVICE	TRAVERSING
2. MANUFACTURE	극동호이스트(주)
3. FRAME NUMBER	90 M
4. RATED POWER	0.8/0.4 KW x 4/8 P
5. RATED VOLTAGE AND FREQUENCY	460 V 60 Hz
6. MOTOR TYPE	SQUIRREL CAGE ROTOR TYPE
7. SERVICE FACTOR AND RATTING	1.0 , 30 MIN
8. LOCATION AND INSULATION CLASS	INDOOR, OUTDOOR, B CLASS
9. DESIGN TRMPERATURE RISE(BY RESISTANCE)	80 ℃
10. FULL LOAD SPEED	1750 / 850 RPM
11. FULL LOAD CURRENT	2.3/2.17 A
12. LOCKED ROTOR CURRENT	8.5/6.18 A
13. MINIMUM STARTING VOLTAGE	418 V
14. EFFICIENCY AT 100% RATED LOAD	72.8/65.8 %
15. POWER FACTOR AT 100% RATED LOAD	82.3/75 %
16. FULL LOAD TORQUE	0.80 KG.M
17. SITE ALTTITUDE(UNDER)	1000 M
18. ENCLOSURE & COOLING METHOD	TENV
19. TYPE OF BEARING	PL : 6205zz OPL : 6204zz
20. MOUNTING	HORIZONTAL
21. MAXIMUM AMBIENT TEMPURE	40 ℃
22. BEARING LUBRICATION	GREASE
23. STARTING METHOD	FULL VOLTAGE

192.168.11.155 / 2011-06-17 15:51:43

불법복제 및 배포금지

THREE PHASE INDUCTION MOTOR DATE SHEET

SCHEDULE OF TECHNICAL DATA

1. SERVICE	TRAVERSING
2. MANUFACTURE	극동호이스트(주)
3. FRAME NUMBER	90 M
4. RATED POWER	0.8/0.4 KW x 4/8 P
5. RATED VOLTAGE AND FREQUENCY	480 V 60 Hz
6. MOTOR TYPE	SQUIRREL CAGE ROTOR TYPE
7. SERVICE FACTOR AND RATTING	1 . 0 , 30 MIN
8. LOCATION AND INSULATION CLASS	INDOOR, OUTDOOR, B CLASS
9. DESIGN TRMPERATURE RISE(BY RESISTANCE)	80 ℃
10. FULL LOAD SPEED	1750 / 850 RPM
11. FULL LOAD CURRENT	2.3/2.1 A
12. LOCKED ROTOR CURRENT	8.4/6.15 A
13. MINIMUM STARTING VOLTAGE	436 V
14. EFFICIENCY AT 100% RATED LOAD	72.8/65.8 %
15. POWER FACTOR AT 100% RATED LOAD	82.3/75 %
16. FULL LOAD TORQUE	0.30 KG.M
17. SITE ALTTITUDE(UNDER)	1000 M
18. ENCLOSURE & COOLING METHOD	T E N V
19. TYPE OF BEARING	PL : 6205zz OPL : 6204zz
20. MOUNTING	H O R I Z O N T A L
21. MAXIMUM AMBIENT TEMPURE	40 ℃
22. BEARING LUBRICATION	G R E A S E
23. STARTING METHOD	F U L L V O L T A G E

192.168.11.155 / 2011-06-17 15:51:43

불법복제 및 배포금지

THREE PHASE INDUCTION MOTOR DATE SHEET

SCHEDULE OF TECHNICAL DATA

1. SERVICE	TRAVERSING
2. MANUFACTURE	극동호이스트(주)
3. FRAME NUMBER	90 L
4. RATED POWER	0.5/025 KW x 6/12 P
5. RATED VOLTAGE AND FREQUENCY	220 V 60 Hz
6. MOTOR TYPE	SQUIRREL CAGE ROTOR TYPE
7. SERVICE FACTOR AND RATTING	1.0 , 30 MIN
8. LOCATION AND INSULATION CLASS	INDOOR, OUTDOOR, B CLASS
9. DESIGN TRMPERATURE RISE(BY RESISTANCE)	80 ℃
10. FULL LOAD SPEED	1050/460 RPM
11. FULL LOAD CURRENT	3.2/3.6 A
12. STARTING CURRENT AT RATED VOLTAGE	12.8/10.8 A
13. MINIMUM STARTING VOLTAGE	200 V
14. EFFICIENCY AT 100% RATED LOAD	57.5/35 %
15. POWER FACTOR AT 100% RATED LOAD	64.5/50 %
16. STARTING TORQUE	0.757/0.506 KG.M
17. SITE ALTTITUDE(UNDER)	1000 M
18. ENCLOSURE & COOLING METHOD	TENV
19. TYPE OF BEARING	PL : 6205zz OPL : 6204zz
20. MOUNTING	HORIZONTAL
21. MAXIMUM AMBIENT TEMPURE	40 ℃
22. BEARING LUBRICATION	GREASE
23. STARTING METHOD	FULL VOLTAGE

192.168.11.155 / 2011-06-17 15:51:43

불법복제 및 배포금지

THREE PHASE INDUCTION MOTOR DATE SHEET

SCHEDULE OF TECHNICAL DATA

1. SERVICE	TRAVERSING
2. MANUFACTURE	극동호이스트(주)
3. FRAME NUMBER	90 L
4. RATED POWER	0.5/025 KW x 6/12 P
5. RATED VOLTAGE AND FREQUENCY	380 V 60 Hz
6. MOTOR TYPE	SQUIRREL CAGE ROTOR TYPE
7. SERVICE FACTOR AND RATTING	1.0 , 30 MIN
8. LOCATION AND INSULATION CLASS	INDOOR, OUTDOOR, B CLASS
9. DESIGN TRMPERATURE RISE(BY RESISTANCE)	80 ℃
10. FULL LOAD SPEED	1050/460 RPM
11. FULL LOAD CURRENT	1.85/2.08 A
12. STARTING CURRENT AT RATED VOLTAGE	7.41/6.25 A
13. MINIMUM STARTING VOLTAGE	345 V
14. EFFICIENCY AT 100% RATED LOAD	57.5/35 %
15. POWER FACTOR AT 100% RATED LOAD	64.5/50 %
16. STARTING TORQUE	0.757/0.506 KG.M
17. SITE ALTTITUDE(UNDER)	1000 M
18. ENCLOSURE & COOLING METHOD	T E N V
19. TYPE OF BEARING	PL : 6205zz OPL : 6204zz
20. MOUNTING	H O R I Z O N T A L
21. MAXIMUM AMBIENT TEMPURE	40 ℃
22. BEARING LUBRICATION	G R E A S E
23. STARTING METHOD	F U L L V O L T A G E

192.168.11.155 / 2011-06-17 15:51:43

불법복제 및 배포금지

THREE PHASE INDUCTION MOTOR DATE SHEET

SCHEDULE OF TECHNICAL DATA

1. SERVICE	TRAVERSING
2. MANUFACTURE	극동호이스트(주)
3. FRAME NUMBER	90 L
4. RATED POWER	0.5/025 KW x 6/12 P
5. RATED VOLTAGE AND FREQUENCY	440 V 60 Hz
6. MOTOR TYPE	SQUIRREL CAGE ROTOR TYPE
7. SERVICE FACTOR AND RATTING	1.0 , 30 MIN
8. LOCATION AND INSULATION CLASS	INDOOR, OUTDOOR, B CLASS
9. DESIGN TRMPERATURE RISE(BY RESISTANCE)	80 ℃
10. FULL LOAD SPEED	1050/460 RPM
11. FULL LOAD CURRENT	1.6/1.8 A
12. STARTING CURRENT AT RATED VOLTAGE	6.4/5.4 A
13. MINIMUM STARTING VOLTAGE	400 V
14. EFFICIENCY AT 100% RATED LOAD	57.5/35 %
15. POWER FACTOR AT 100% RATED LOAD	64.5/50 %
16. STARTING TORQUE	0.757/0.506 KG.M
17. SITE ALTTITUDE(UNDER)	1000 M
18. ENCLOSURE & COOLING METHOD	T E N V
19. TYPE OF BEARING	PL : 6205zz OPL : 6204zz
20. MOUNTING	H O R I Z O N T A L
21. MAXIMUM AMBIENT TEMPURE	40 ℃
22. BEARING LUBRICATION	G R E A S E
23. STARTING METHOD	F U L L V O L T A G E

192.168.11.155 / 2011-06-17 15:51:43

불법복제 및 배포금지

THREE PHASE INDUCTION MOTOR DATE SHEET

SCHEDULE OF TECHNICAL DATA

1. SERVICE	TRAVERSING
2. MANUFACTURE	극동호이스트(주)
3. FRAME NUMBER	90 L
4. RATED POWER	0.5/025 KW x 6/12 P
5. RATED VOLTAGE AND FREQUENCY	460 V 60 Hz
6. MOTOR TYPE	SQUIRREL CAGE ROTOR TYPE
7. SERVICE FACTOR AND RATTING	1.0 , 30 MIN
8. LOCATION AND INSULATION CLASS	INDOOR, OUTDOOR, B CLASS
9. DESIGN TRMPERATURE RISE(BY RESISTANCE)	80 ℃
10. FULL LOAD SPEED	1050/460 RPM
11. FULL LOAD CURRENT	1.5/1.72 A
12. STARTING CURRENT AT RATED VOLTAGE	6.2/5.3 A
13. MINIMUM STARTING VOLTAGE	418 V
14. EFFICIENCY AT 100% RATED LOAD	57.5/35 %
15. POWER FACTOR AT 100% RATED LOAD	64.5/50 %
16. STARTING TORQUE	0.757/0.506 KGM
17. SITE ALTTITUDE(UNDER)	1000 M
18. ENCLOSURE & COOLING METHOD	T E N V
19. TYPE OF BEARING	PL : 6205zz OPL : 6204zz
20. MOUNTING	H O R I Z O N T A L
21. MAXIMUM AMBIENT TEMPURE	40 ℃
22. BEARING LUBRICATION	G R E A S E
23. STARTING METHOD	F U L L V O L T A G E

192.168.11.155 / 2011-06-17 15:51:43

불법복제 및 배포금지

THREE PHASE INDUCTION MOTOR DATE SHEET

SCHEDULE OF TECHNICAL DATA

1. SERVICE	TRAVERSING
2. MANUFACTURE	극동호이스트(주)
3. FRAME NUMBER	90 L
4. RATED POWER	0.5/025 KW x 6/12 P
5. RATED VOLTAGE AND FREQUENCY	480 V 60 Hz
6. MOTOR TYPE	SQUIRREL CAGE ROTOR TYPE
7. SERVICE FACTOR AND RATTING	1.0 , 30 MIN
8. LOCATION AND INSULATION CLASS	INDOOR, OUTDOOR, B CLASS
9. DESIGN TRMPERATURE RISE(BY RESISTANCE)	80 ℃
10. FULL LOAD SPEED	1050/460 RPM
11. FULL LOAD CURRENT	1.4/1.6 A
12. STARTING CURRENT AT RATED VOLTAGE	5.82/4.93 A
13. MINIMUM STARTING VOLTAGE	436 V
14. EFFICIENCY AT 100% RATED LOAD	57.5/35 %
15. POWER FACTOR AT 100% RATED LOAD	64.5/50 %
16. STARTING TORQUE	0.757/0.506 KG.M
17. SITE ALTTITUDE(UNDER)	1000 M
18. ENCLOSURE & COOLING METHOD	T.E.N.V
19. TYPE OF BEARING	PL : 6205zz OPL : 6204zz
20. MOUNTING	HORIZONTAL
21. MAXIMUM AMBIENT TEMPURE	40 ℃
22. BEARING LUBRICATION	GREASE
23. STARTING METHOD	FULL VOLTAGE

192.168.11.155 / 2011-06-17 15:51:43

불법복제 및 배포금지

Manho Rope & Wire Ltd.

Registered by

Manufacture
1080-11,SONGJOUNG-DONG,GANGSEO-KU,
BUSAN,KOREA
TEL : 82-51-831-5811-5
FAX : 82-51-831-5812

AMERICAN BUREAU OF SHIPPING
LLOYD'S REGISTER OF SHIPPING
KOREAN REGISTER OF SHIPPING
NIPPON KAIJI KYOKAI
DET NORSKE VERITAS
GERMANISCHER LLOYD
RINA REGISTRO ITALIANO NAVALE
NORSKE VERITAS

Sheet No. 2011H-415-01

Date MAY.31.2011

MILL TEST CERTIFICATE

Customer : Messrs

Supplier : Messrs MANHO ROPE & WIRE LTD.

L/C No. Order No.

Commodity GALVANIZED STEEL WIRE ROPE

Construction 6X19 FC Grade 180 Kg/mm²

Specification KS D3514 Lubrication DRY

Order Quantity 2,000.00 m Reel No.

Gross Weight Net Weight 488.00 Kgs

TEST RESULT

Rope Dia 8.00 (Actual) 8.060 mm Performing Good

Kind of Lay R.H.R.L Length of Lay 30.39 mm

Actual Breaking strength of Wire Rope 3,900.00 Kgs

Nominal Dia. of Wire 0.560 mm

Tensile Strength of Wires Min 184 Max 189 Kg / mm²

Number of Torsion of Wires Min 30 Max 30 times

Weight of Zinc Coating 54.300 g / m²

CHEMICAL ANALYSIS OF WIRE ROD

Heat No.	C	Si	Mn	P	S
5A18527	0.6282	0.193	0.755	0.0128	0.007

REMARKS

KS ABS LLOYDS KR NK DNV GL RINA BV APIQA JIS

Quality Control Dept

MHS-B102-3) Manho Rope & Wire Ltd. (203X280)

192.168.11.155 / 2011-06-17 15:51:43